scilm®
AMERICA
furniture technology for kitchens

NEWS 2023

Project² Structure System
6055 LED Profile
Door Profile 2636
Handle Profile 2637
Handle Profile 2582

EUROPEAN DESIGN

REV. 2023/07/01

scilm®
AMERICA
furniture technology for kitchens

THE DIFFERENCE IN THE KITCHEN

REV. 2023/07/01

EUROPEAN DESIGN

Project²

Watch the video

PROJECT2 30X30

30X30 STRUCTURE ASSEMBLY

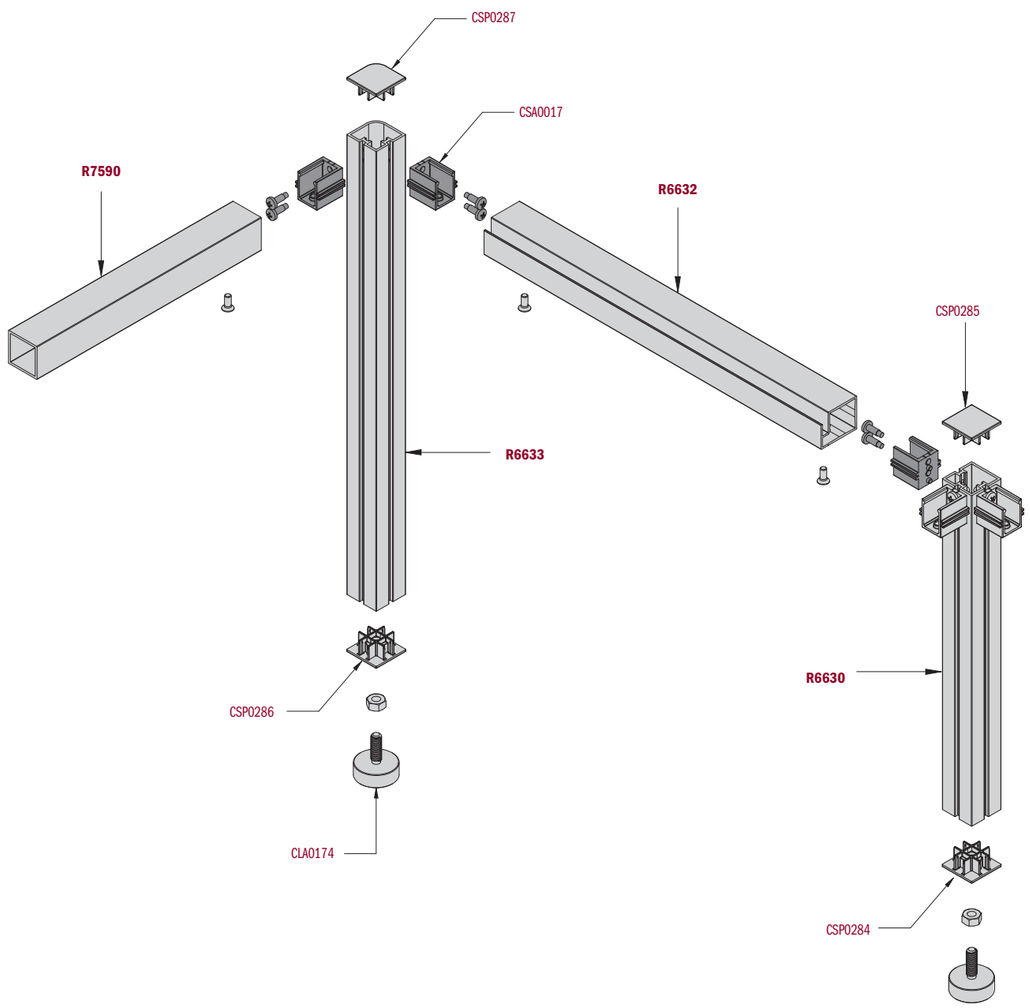

R6630
Upright 31x31

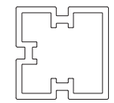

R6633
Upright 31x31

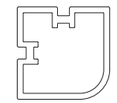

R7590
Crossbeam 30x30

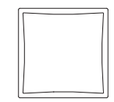

R6632
Crossbeam for thick glass 4-6 mm and for wood 19 mm

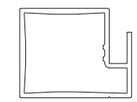

CSA0017
Joint for art. R6630 - R6632 - R6633 - R7590

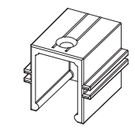

CSP0285
Upper Cover for art. 6630

CSP0287
Upper Cover for art. 6633

CEP0038-01
Gasket for 4 mm glass

CSP0284
Leg cover for art. 6630

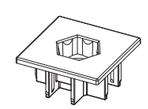

CSP0286
Leg cover for art. 6633

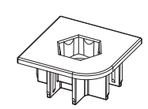

CEP0039-01
Gasket for 6 mm glass

CLA0174
Aluminium adjusters for structures

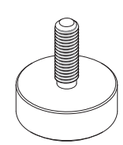

CLA0174
Aluminium adjusters for structures

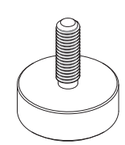

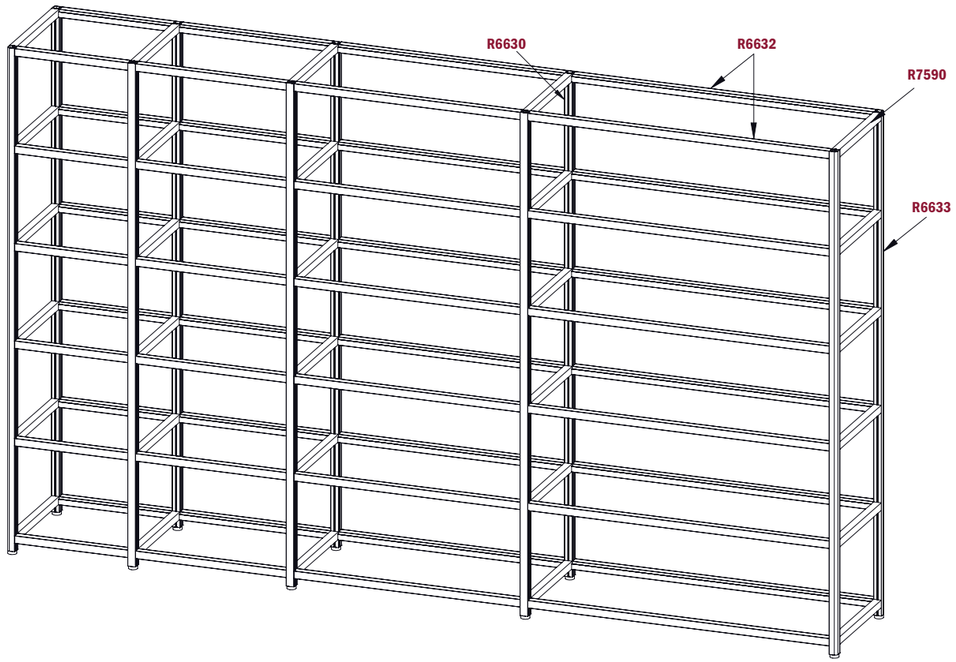

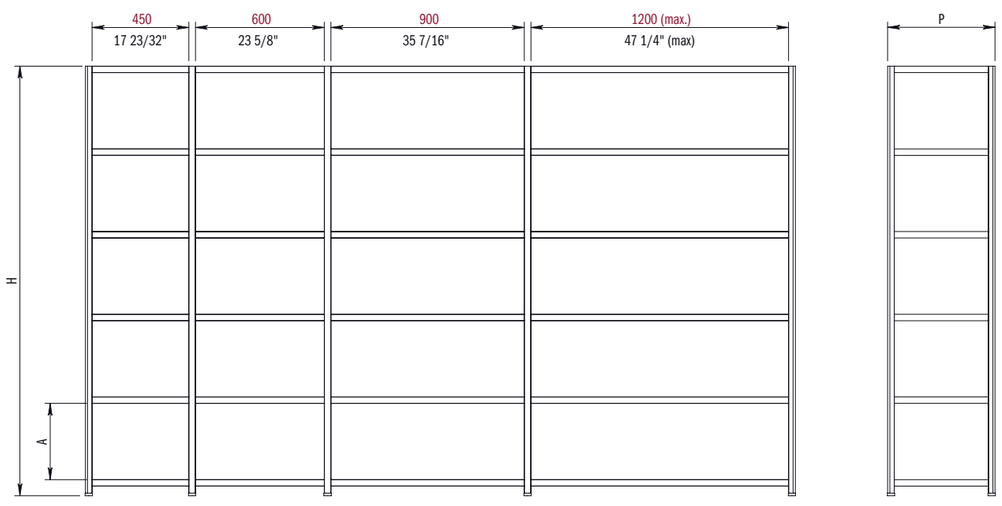

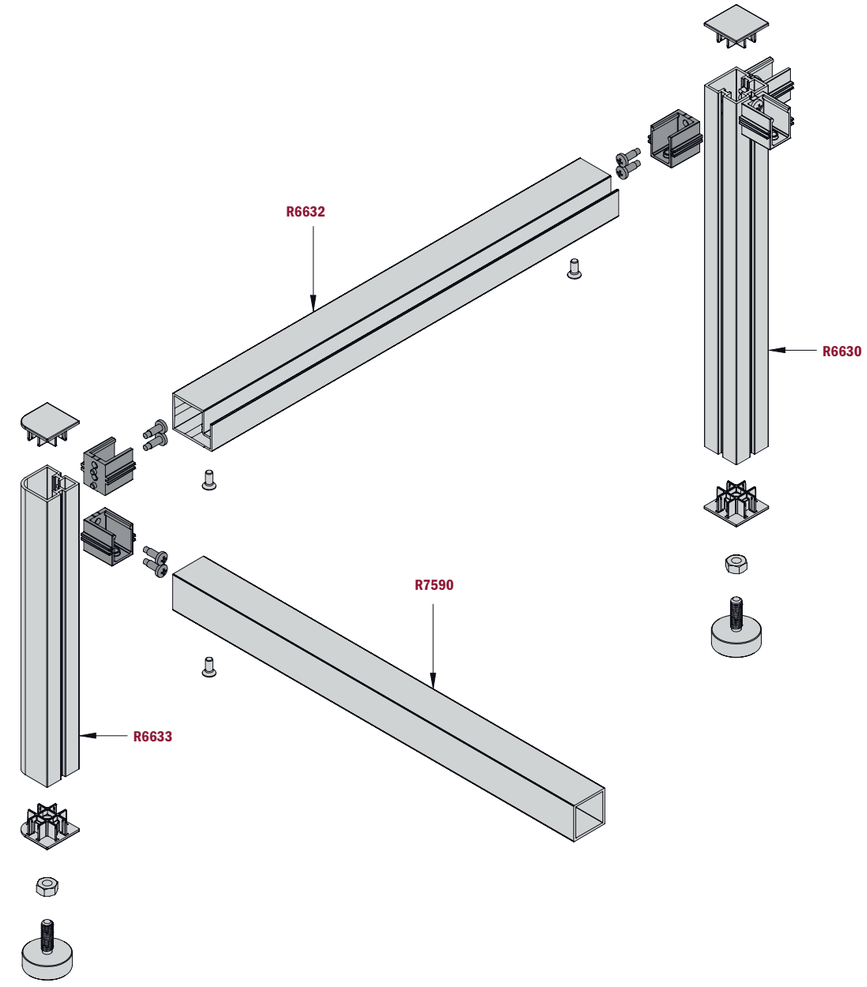

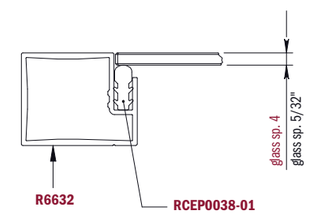

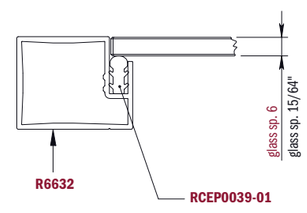

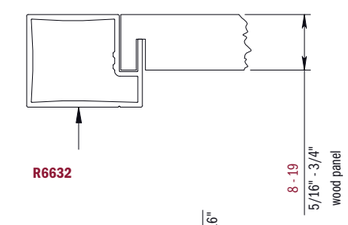

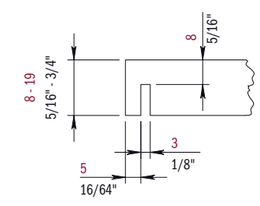

Machining for wood shelf

6630

ALUMINIUM INTERMEDIATE UPRIGHT PROFILE
V13 Black Textured Powder Coated

PROFILÉ MONTANT INTERMÉDIAIRE EN ALUMINIUM
V13 Aluminium Noire Texturé Vernie

PERFIL MONTANTE INTERMEDIO DE ALUMINIO
V13 Aluminio Negro Texturizado

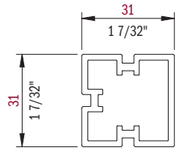

COLORS	ITEM NUMBER	LENGTH mm	LENGTH inch	PCS PER BOX	BOX DIMENSION mm W x D x H	BOX DIMENSION inch W x D x H	BOX WEIGHT KG	BOX WEIGHT LB	STOCK IN AMERICA MSRP PRICING USD METER	FOOT	EACH	BOX
V13	UR6630V13L45	4500	177 3/16"	6	4550 x 120 x 85	179 1/8" x 4 3/4" x 3 3/8"	22.65	49.93	35.151	10.714	158.180	949.077

6633

ALUMINIUM SIDE UPRIGHT PROFILE
V13 Black Textured Powder Coated

PROFILÉ MONTANT LATERAL EN ALUMINIUM
V13 Aluminium Noire Texturé Vernie

PERFIL MONTANTE LATERAL DE ALUMINIO
V13 Aluminio Negro Texturizado

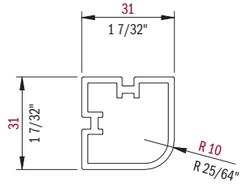

COLORS	ITEM NUMBER	LENGTH mm	LENGTH inch	PCS PER BOX	BOX DIMENSION mm W x D x H	BOX DIMENSION inch W x D x H	BOX WEIGHT KG	BOX WEIGHT LB	STOCK IN AMERICA MSRP PRICING USD METER	FOOT	EACH	BOX
V13	UR6633V13L45	4500	177 3/16"	6	4550 x 120 x 85	179 1/8" x 4 3/4" x 3 3/8"	22.65	49.93	35.151	10.714	158.180	949.077

7590

ALUMINIUM LATERAL PROFILE
V13 Black Textured Powder Coated

PROFILÉ LATERAL EN ALUMINIUM
V13 Aluminium Noire Texturé Vernie

PERFIL LATERAL DE ALUMINIO
V13 Aluminio Negro Texturizado

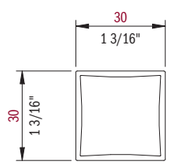

COLORS	ITEM NUMBER	LENGTH mm	LENGTH inch	PCS PER BOX	BOX DIMENSION mm W x D x H	BOX DIMENSION inch W x D x H	BOX WEIGHT KG	BOX WEIGHT LB	STOCK IN AMERICA MSRP PRICING USD METER	FOOT	EACH	BOX
V13	UR7590V13L45	4500	177 3/16"	6	4550 x 120 x 85	179 1/8" x 4 3/4" x 3 3/8"	5.74	12.65	32.854	10.014	147.843	887.058

6632

ALUMINIUM FRONT & REAR PROFILE FOR SHELVING
For Glass Shelves 4mm and 6mm and Wood Shelves up to 19mm
V13 Black Textured Powder Coated

PROFILÉ AVANT & ARRIÈRE EN ALUMINIUM POUR STRUCTURES ÉTAGÈRE
Pour le étagères en verre 4 et 6mm et en bois jusqu'à 19mm
V13 Aluminium Noire Texturé Vernie

PERFIL DE TRAVÉS DE ALUMINIO PARA ESTANTES
Para estantes de vidrio 4mm y 6mm y madera hasta 19mm
V13 Aluminio Negro Texturizado

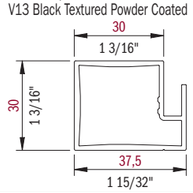

COLORS	ITEM NUMBER	LENGTH mm	LENGTH inch	PCS PER BOX	BOX DIMENSION mm W x D x H	BOX DIMENSION inch W x D x H	BOX WEIGHT KG	BOX WEIGHT LB	STOCK IN AMERICA MSRP PRICING USD METER	FOOT	EACH	BOX
V13	UR6632V13L45	4500	177 3/16"	6	4550 x 120 x 85	179 1/8" x 4 3/4" x 3 3/8"	18.13	39.97	34.952	10.653	157.284	943.704

CEP

GASKET FOR GLASS SHELVES
* For 4mm - 5/32" glass
** For 6mm - 1/4" glass

JOINT D'ÉTANCHÈITÉ POUR ÉTAGÈRE EN VERRE
** Pour verre de 4mm - 5/32"*
*** Pour verre de 6mm - 1/4"*

JUNTA PARA ESTANTES DE VIDRIO
* Para de vidrio 4mm - 5/32"
** Para de vidrio 6mm - 1/4"

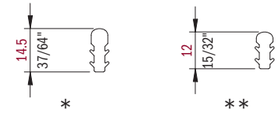

COLORS	ITEM NUMBER	LENGTH mm	LENGTH inch	PCS PER BOX	BOX DIMENSION mm W x D x H	BOX DIMENSION inch W x D x H	BOX WEIGHT KG	BOX WEIGHT LB	STOCK IN AMERICA MSRP PRICING USD METER	FOOT	EACH	BOX
*	URCEP0038-01	40000	1574 13/16"	1	460 x 170 x 120	18 1/8" x 6 3/4" x 4 3/4"	4	8.82	6.349	1.935	253.960	253.960
**	URCEP0039-01	40000	1574 13/16"	1	460 x 170 x 120	18 1/8" x 6 3/4" x 4 3/4"	3.3	7.28	6.349	1.935	253.960	253.960

CF.6630-XX/01

COMPLETE KIT OF CAP BOLT AND ADJUSTER FOR 6630

KIT COMPLET DE BOULON CAPUCHON ET AJUSTEUR POUR 6630

KIT COMPLETO DE TORNILLO TAPA Y REGULADOR PARA 6630

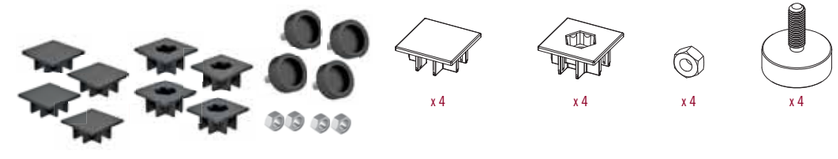

COLORS	ITEM NUMBER	LENGTH mm	LENGTH inch	PCS PER BOX	BOX DIMENSION mm W x D x H	BOX DIMENSION inch W x D x H	BOX WEIGHT KG	BOX WEIGHT LB	STOCK IN AMERICA MSRP PRICING USD METER	FOOT	KIT	BOX
	UCF.6630-06/01	-	-	10	220 x 190 x 160	8 5/8" x 7 1/2" x 6 1/4"	2.36	5.20	-	-	107.470	1074.700

CF.6633-XX/01

COMPLETE KIT OF CAP BOLT AND ADJUSTER FOR 6633

KIT COMPLET DE BOULON CAPUCHON ET AJUSTEUR POUR 6633

KIT COMPLETO DE TORNILLO TAPA Y REGULADOR PARA 6633

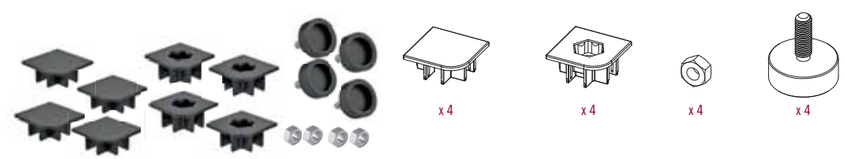

COLORS	ITEM NUMBER	LENGTH mm	LENGTH inch	PCS PER BOX	BOX DIMENSION mm W x D x H	BOX DIMENSION inch W x D x H	BOX WEIGHT KG	BOX WEIGHT LB	STOCK IN AMERICA MSRP PRICING USD METER	FOOT	KIT	BOX
	UCF.6633-06/01	-	-	10	220 x 190 x 160	8 5/8" x 7 1/2" x 6 1/4"	2.36	5.20	-	-	107.470	1074.700

CF.CSA0017-01

COMPLETE KIT OF JOINING BLOCK AND SCREW FOR 6630 - 6632 - 6633 - 7590

KIT COMPLET DE BLOC D'ASSEMBLAGE ET VIS POUR 6630 - 6632 - 6633 - 7590

KIT COMPLETO DE BLOQUE DE UNIÓN Y TORNILLO PARA 6630 - 6632 - 6633 - 7590

COLORS	ITEM NUMBER	LENGTH mm	LENGTH inch	PCS PER BOX	BOX DIMENSION mm W x D x H	BOX DIMENSION inch W x D x H	BOX WEIGHT KG	BOX WEIGHT LB	STOCK IN AMERICA MSRP PRICING USD METER	FOOT	KIT	BOX
	UCF.CSA0017-01	-	-	10	220 x 190 x 160	8 5/8" x 7 1/2" x 6 1/4"	4.6	10.14	-	-	39.540	395.400

PROJECT2 30X30

DRILLING SPECIFICATIONS

R6630 / R6633

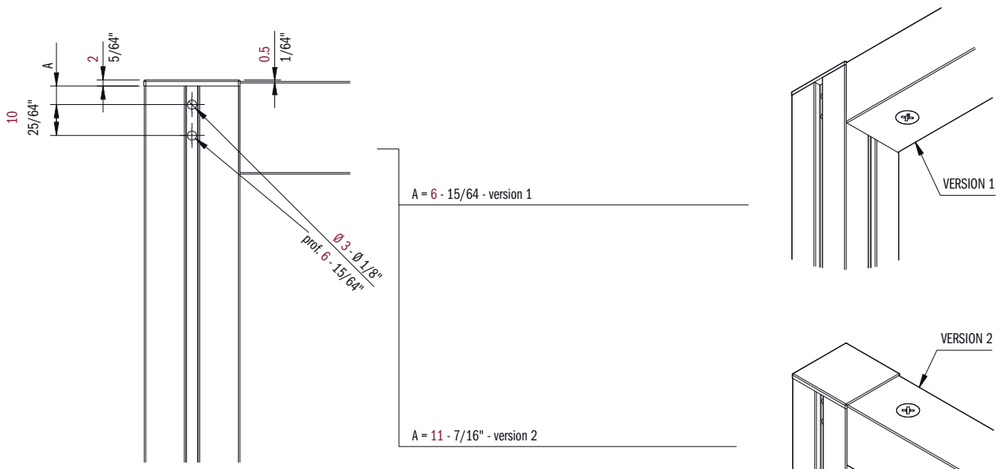

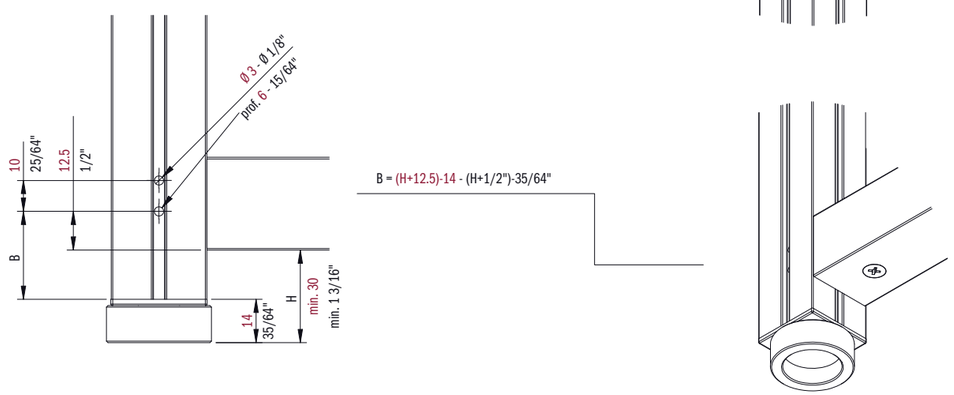

R7590

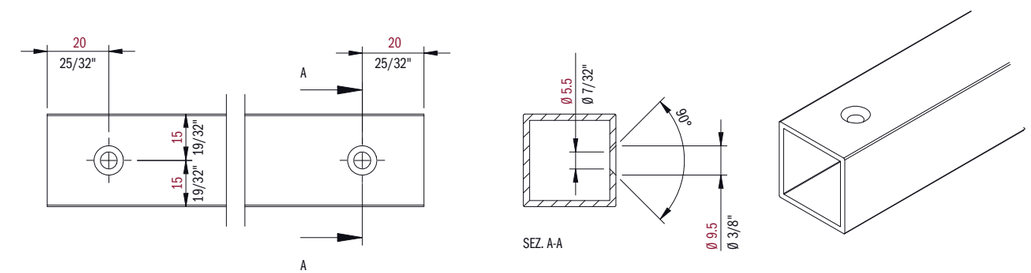

R6632

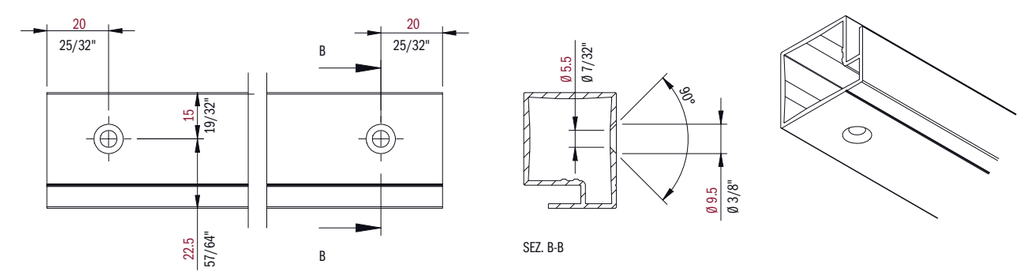

CF.6630-xx/01

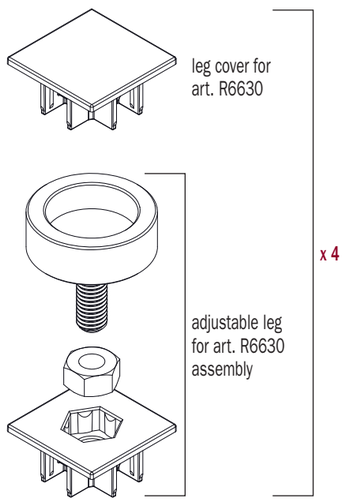

CF.6633-xx/01

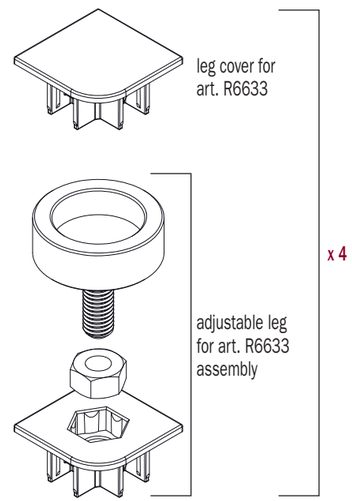

CF.CSA0017/01

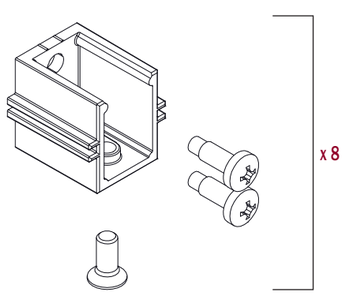

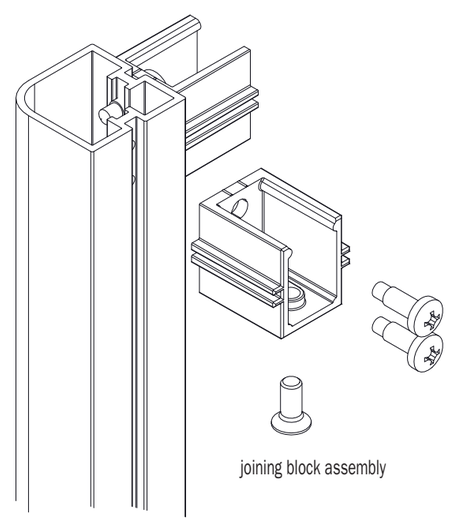

ATTENTION:
In the figure you can see the joining block assembly for VERSION 1 (screw in the underside).
If you want the VERSION 2 (screw in the upperside) you have to rotate the joining block 180°.

PROJECT2 55X31

55X31 STRUCTURE ASSEMBLY

SOLUTION A

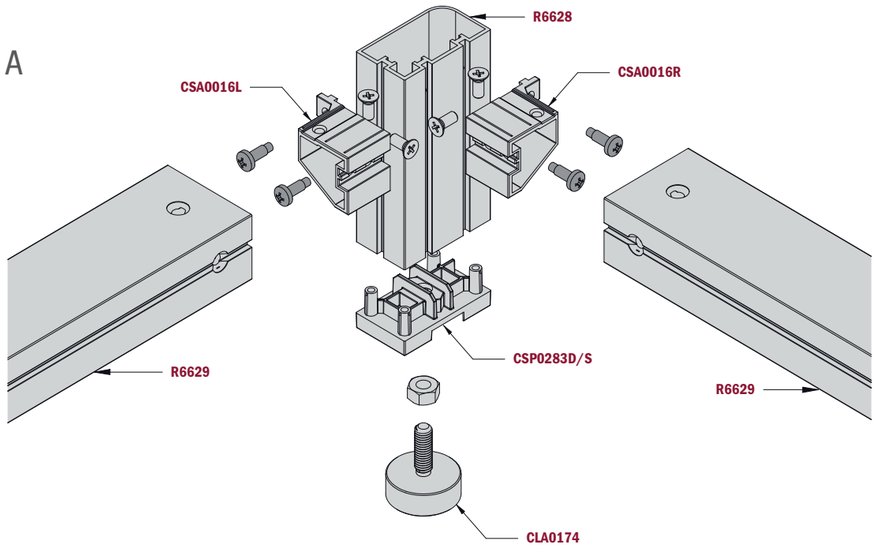

SOLUTION B

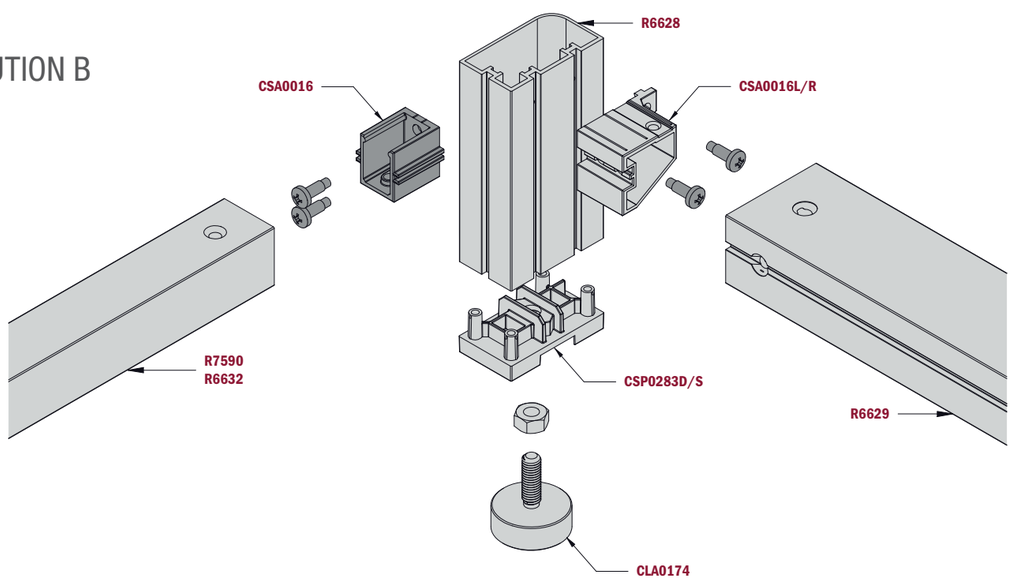

R6628
Upright 55x31

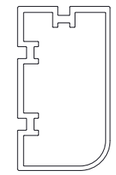

R6629
Crossbeam

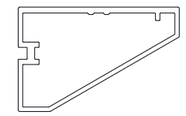

R6630
Reinforcing upright
31x31

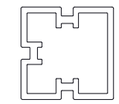

R7590
Crossbeam 30x30

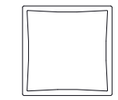

R6632
Crossbeam 30x30

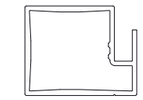

CSP0283D
Leg cover

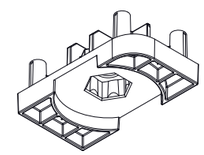

CSA0016R
Joint for 55x31

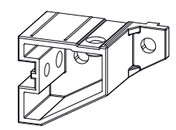

CSP0284
Leg cover

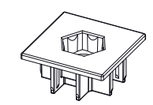

CSA0017
Joint for 30x30
art. R6630, R6632 and R7590

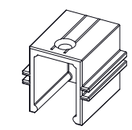

CSP0283S
Leg cover

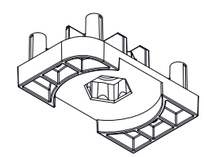

CSA0016L
Joint for 55x31

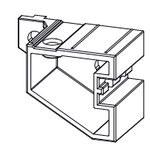

CLA0174
Aluminium adjuster
for structure

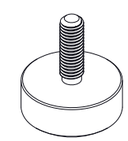

CLA0174
Aluminium adjuster
for structure

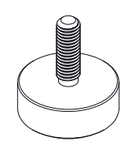

6628

ALUMINIUM UPRIGHT PROFILE 51x31
V13 Black Textured Powder Coated

PROFILÉ MONTANT 51x31 EN ALUMINIUM
V13 Aluminium Noire Texturé Vernie

PERFIL MONTANTE 51x31 DE ALUMINIO
V13 Aluminio Negro Texturizado

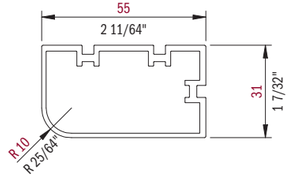

COLORS	ITEM NUMBER	LENGTH mm	LENGTH inch	PCS PER BOX	BOX DIMENSION mm W x D x H	BOX DIMENSION inch W x D x H	BOX WEIGHT KG	BOX WEIGHT LB	STOCK IN AMERICA MSRP PRICING USD METER	FOOT	EACH	BOX
V13	UR6628V13L45	4500	177 3/16"	5	4550 x 120 x 85	179 1/8" x 4 3/4" x 3 3/8"	22.22	48.99	39.895	12.160	179.528	897.638

6629

ALUMINIUM LATERAL PROFILE
V13 Black Textured Powder Coated

PROFILÉ LATERAL EN ALUMINIUM
V13 Aluminium Noire Texturé Vernie

PERFIL LATERAL DE ALUMINIO
V13 Aluminio Negro Texturizado

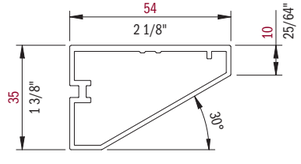

COLORS	ITEM NUMBER	LENGTH mm	LENGTH inch	PCS PER BOX	BOX DIMENSION mm W x D x H	BOX DIMENSION inch W x D x H	BOX WEIGHT KG	BOX WEIGHT LB	STOCK IN AMERICA MSRP PRICING USD METER	FOOT	EACH	BOX
V13	UR6629V13L45	4500	177 3/16"	6	4550 x 120 x 85	179 1/8" x 4 3/4" x 3 3/8"	22.27	49.10	34.825	10.615	156.713	940.275

6630

ALUMINIUM INTERMEDIATE UPRIGHT PROFILE
V13 Black Textured Powder Coated

PROFILÉ MONTANT INTERMÉDIAIRE EN ALUMINIUM
V13 Aluminium Noire Texturé Vernie

PERFIL MONTANTE INTERMEDIO DE ALUMINIO
V13 Aluminio Negro Texturizado

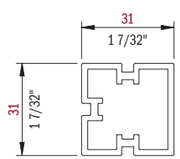

COLORS	ITEM NUMBER	LENGTH mm	LENGTH inch	PCS PER BOX	BOX DIMENSION mm W x D x H	BOX DIMENSION inch W x D x H	BOX WEIGHT KG	BOX WEIGHT LB	STOCK IN AMERICA MSRP PRICING USD METER	FOOT	EACH	BOX
V13	UR6630V13L45	4500	177 3/16"	6	4550 x 120 x 85	179 1/8" x 4 3/4" x 3 3/8"	22.65	49.93	35.151	10.714	158.180	949.077

7590

ALUMINIUM LATERAL PROFILE
V13 Black Textured Powder Coated

PROFILÉ LATERAL EN ALUMINIUM
V13 Aluminium Noire Texturé Vernie

PERFIL LATERAL DE ALUMINIO
V13 Aluminio Negro Texturizado

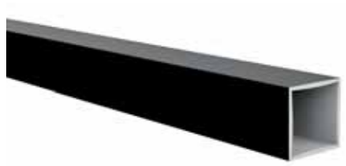

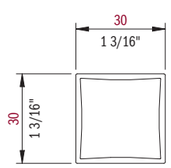

COLORS	ITEM NUMBER	LENGTH mm	LENGTH inch	PCS PER BOX	BOX DIMENSION mm W x D x H	BOX DIMENSION inch W x D x H	BOX WEIGHT KG	BOX WEIGHT LB	STOCK IN AMERICA MSRP PRICING USD METER	FOOT	EACH	BOX
V13	UR7590V13L45	4500	177 3/16"	6	4550 x 120 x 85	179 1/8" x 4 3/4" x 3 3/8"	5.74	12.65	32.854	10.014	147.843	887.058

6632

ALUMINIUM FRONT & REAR PROFILE FOR SHELVING
For Glass Shelves 4mm and 6mm and Wood Shelves up to 19mm
V13 Black Textured Powder Coated

PROFILÉ AVANT & ARRIÈRE EN ALUMINIUM POUR STRUCTURES ÉTAGÈRE
Pour le étagères en verre 4 et 6mm et en bois jusqu'à 19mm
V13 Aluminium Noire Texturé Vernie

PERFIL DE TRAVÉS DE ALUMINIO PARA ESTANTES
Para estantes de vidrio 4mm y 6mm y madera hasta 19mm
V13 Aluminio Negro Texturizado

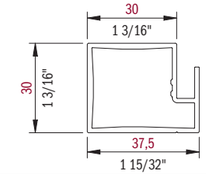

COLORS	ITEM NUMBER	LENGTH mm	LENGTH inch	PCS PER BOX	BOX DIMENSION mm W x D x H	BOX DIMENSION inch W x D x H	BOX WEIGHT KG	BOX WEIGHT LB	STOCK IN AMERICA MSRP PRICING USD METER	FOOT	EACH	BOX
V13	UR6632V13L45	4500	177 3/16"	6	4550 x 120 x 85	179 1/8" x 4 3/4" x 3 3/8"	18.13	39.97	34.952	10.653	157.284	943.704

CEP

GASKET FOR GLASS SHELVES
* For 4mm - 5/32" glass
** For 6mm - 1/4" glass

JOINT D'ÉTANCHÈITÉ POUR ÉTAGÈRE EN VERRE
** Pour verre de 4mm - 5/32"*
*** Pour verre de 6mm - 1/4"*

JUNTA PARA ESTANTES DE VIDRIO
* Para de vidrio 4mm - 5/32"
** Para de vidrio 6mm - 1/4"

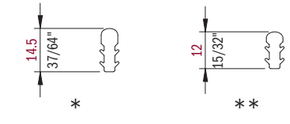

COLORS	ITEM NUMBER	LENGTH mm	LENGTH inch	PCS PER BOX	BOX DIMENSION mm W x D x H	BOX DIMENSION inch W x D x H	BOX WEIGHT KG	BOX WEIGHT LB	STOCK IN AMERICA MSRP PRICING USD METER	FOOT	EACH	BOX
*	URCEP0038-01	40000	1574 13/16"	1	460 x 170 x 120	18 1/8" x 6 3/4" x 4 3/4"	4	8.82	6.349	1.935	253.960	253.960
**	URCEP0039-01	40000	1574 13/16"	1	460 x 170 x 120	18 1/8" x 6 3/4" x 4 3/4"	3.3	7.28	6.349	1.935	253.960	253.960

CF.6628-XX/01

COMPLETE KIT OF BOLT AND ADJUSTER FOR 6628

KIT COMPLET DE BOULON ET AJUSTEUR POUR 6628

KIT COMPLETO DE TORNILLO Y REGULADOR PARA 6628

COLORS	ITEM NUMBER	LENGTH mm	LENGTH inch	PCS PER BOX	BOX DIMENSION mm W x D x H	BOX DIMENSION inch W x D x H	BOX WEIGHT KG	BOX WEIGHT LB	STOCK IN AMERICA MSRP PRICING USD METER	FOOT	KIT	BOX
	UCF.6628-06/01	-	-	10	220 x 190 x 160	8 5/8" x 7 1/2" x 6 1/4"	2.57	5.67	-	-	102.015	1020.150

CF.CSA0016-01

COMPLETE KIT OF JOINING BLOCK AND SCREW FOR STRUCTURE 55X31

KIT COMPLET DE BLOC D'ASSEMBLAGE ET VIS POUR STRUCTURE 51x31

KIT COMPLETO DE BLOQUE DE UNIÓN Y TORNILLO PARA ESTRUCTURA 51x31

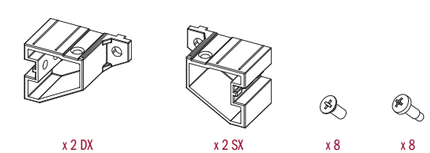

COLORS	ITEM NUMBER	LENGTH mm	LENGTH inch	PCS PER BOX	BOX DIMENSION mm W x D x H	BOX DIMENSION inch W x D x H	BOX WEIGHT KG	BOX WEIGHT LB	STOCK IN AMERICA MSRP PRICING USD METER	FOOT	KIT	BOX
	UCF.CSA0016-01	-	-	10	220 x 190 x 160	8 5/8" x 7 1/2" x 6 1/4"	3.6	7.94	-	-	30.614	306.140

CF.6630-XX/02

COMPLETE KIT OF CAP BOLT AND ADJUSTER FOR 6630

KIT COMPLET DE BOULON CAPUCHON ET AJUSTEUR POUR 6630

KIT COMPLETO DE TORNILLO TAPA Y REGULADOR PARA 6630

COLORS	ITEM NUMBER	LENGTH		PCS PER BOX	BOX DIMENSION		BOX WEIGHT		STOCK IN AMERICA MSRP PRICING USD			
					mm	inch						
		mm	inch		W x D x H	W x D x H	KG	LB	METER	FOOT	KIT	BOX
	UCF.6630-06/02	-	-	10	220 x 190 x 160	8 5/8" x 7 1/2" x 6 1/4"	1.18	2.60	-	-	28.135	281.350

CF.CSA0017-01

COMPLETE KIT OF JOINING BLOCK AND SCREW FOR 6630 - 6632 - 6633 - 7590

KIT COMPLET DE BLOC D'ASSEMBLAGE ET VIS POUR 6630 - 6632 - 6633 - 7590

KIT COMPLETO DE BLOQUE DE UNIÓN Y TORNILLO PARA 6630 - 6632 - 6633 - 7590

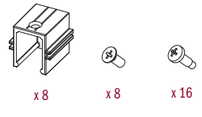

COLORS	ITEM NUMBER	LENGTH		PCS PER BOX	BOX DIMENSION		BOX WEIGHT		STOCK IN AMERICA MSRP PRICING USD			
					mm	inch						
		mm	inch		W x D x H	W x D x H	KG	LB	METER	FOOT	KIT	BOX
	UCF.CSA0017-01	-	-	10	220 x 190 x 160	8 5/8" x 7 1/2" x 6 1/4"	4.6	10.14	-	-	39.540	395.400

PROJECT2 55X31

CABINET BASES

ISLAND

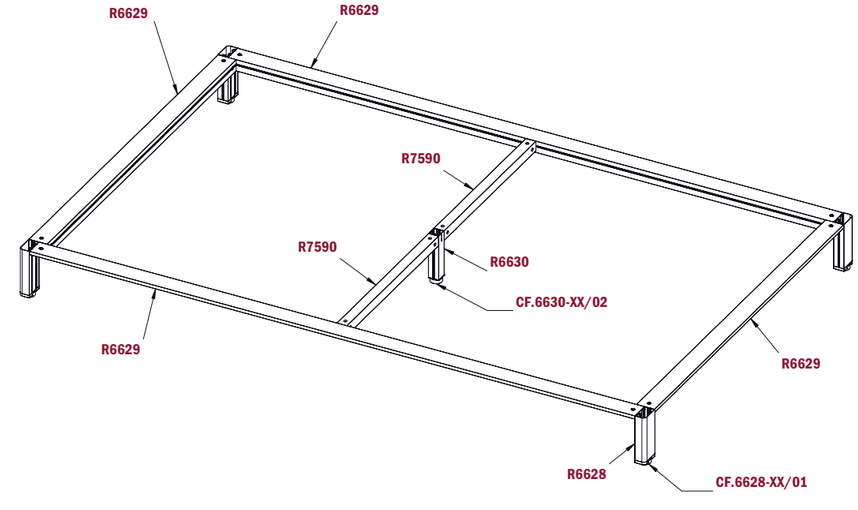

ISLAND WITH SIDES

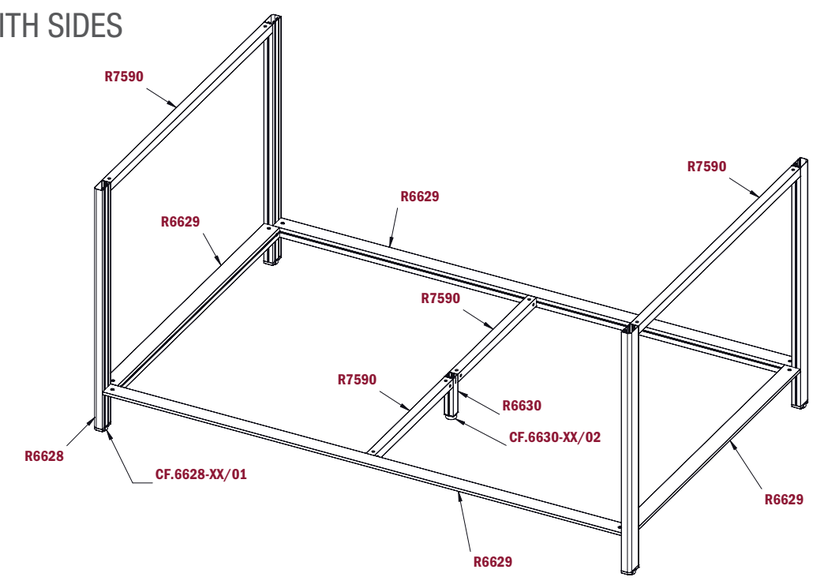

PROJECT2 55X31

CABINET BASES

ISLAND

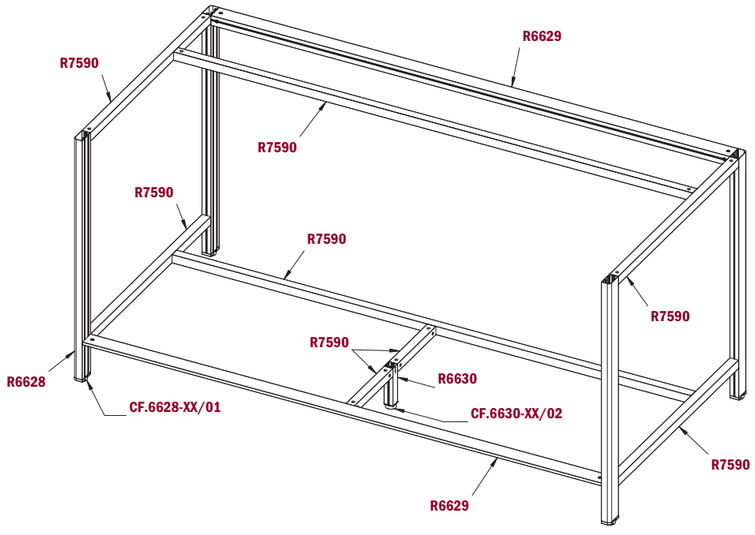

WALL LINEAR

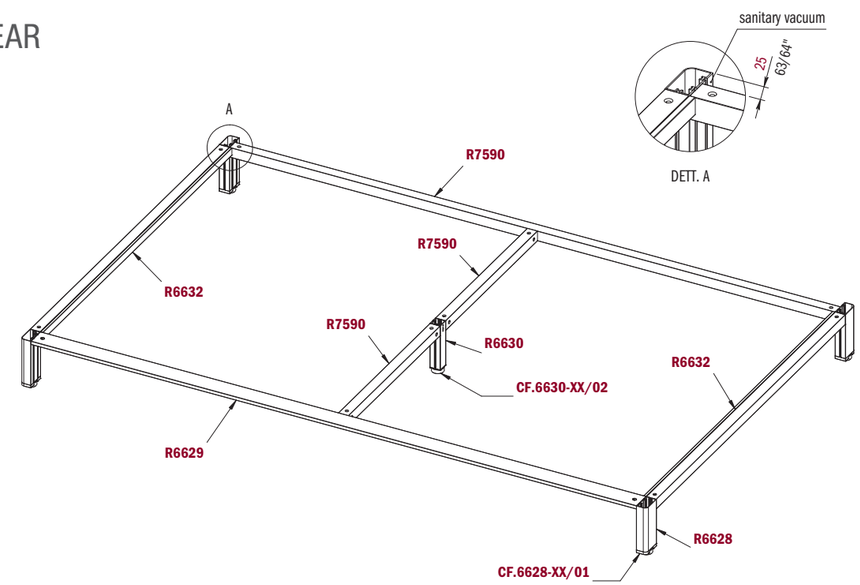

PENINSULA TABLE

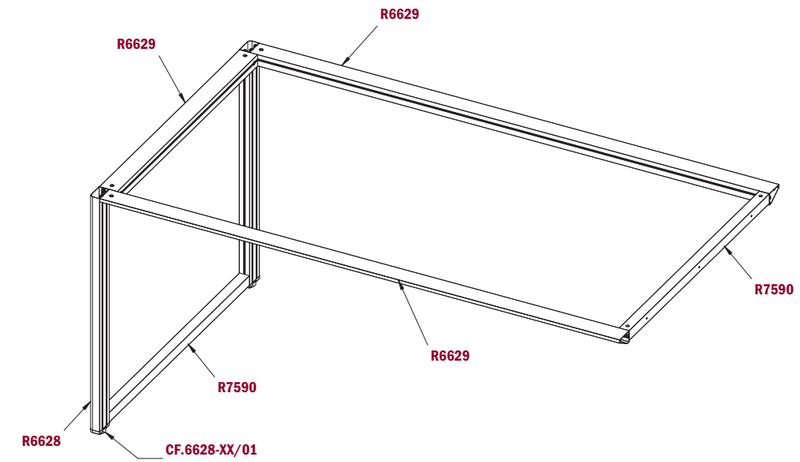

6055

6055

ALUMINIUM PROFILE FOR LED STRIP FOR HORIZONTAL GOLA
with pre fitted double-sided tape
50C Aluminium Silver Anodize
85C Aluminium Black Anodize

6055

PROFILÉ EN ALUMINIUM POUR BANDE LED POUR GOLA HORIZONTALE
avec ruban adhésif double face pré-installé
50C Aluminium Argent Anodisé
85C Aluminium Noir Anodisé

6055

PERFIL DE ALUMINIO PARA TIRA DE LED PARA GOLA HORIZONTAL
con cinta de doble cara preinstalada
50C Aluminio Plata Anodizado
85C Aluminio Negro Anodizado

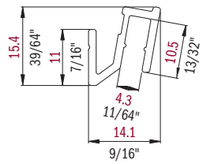

COLORS	ITEM NUMBER	LENGTH		PCS PER BOX	BOX DIMENSION		BOX WEIGHT		STOCK IN AMERICA MSRP PRICING USD			
					mm	inch						
		mm	inch		W x D x H	W x D x H	KG	LB	METER	FOOT	EACH	BOX
50C	U605550CL205B	2050	80 11/16''	10	2150 x 150 x 50	84 5/8" x 5 7/8" x 2"	5	11.02	20.106	6.128	41.217	412.173
50C	U605550CL41B	4100	161 7/16''	10	4200 x 150 x 50	165 3/8" x 5 7/8" x 2"	10	22.05	16.021	4.883	65.686	656.861
85C	U605585CL205B	2050	80 11/16''	10	2150 x 150 x 50	84 5/8" x 5 7/8" x 2"	5	11.02	28.248	8.610	57.908	579.084
85C	U605585CL41B	4100	161 7/16''	10	4200 x 150 x 50	165 3/8" x 5 7/8" x 2"	10	22.05	24.336	7.418	99.778	997.776

6055

ASSEMBLY METHODS

To be used with the following gola profiles:
- 8006
- 8030
- 8007
- 8070

1. Assembly with screw

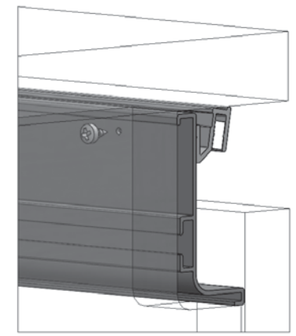

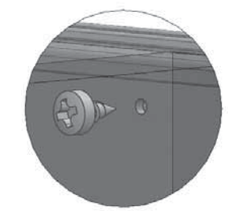

- Use self-threading screw 2,9x6,5TB (not provided)
- Use approximately one screw each meter
- Use "closed" end caps

2. Assembly with double sided tape

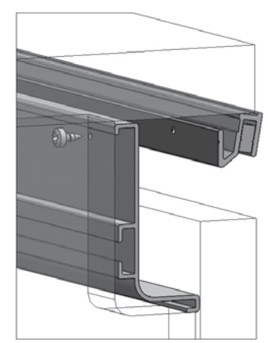

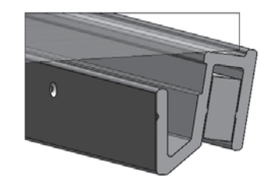

- The use of screws is recommended also when fixing the profile with double sided tape
- Use self-threading screw 2,9x6,5TB (not provided)
- Use approximately one screw each meter
- Use "closed" end caps

2636

ALUMINIUM DOOR 20X20 FOR GLUED GLASS

ALUMINUM DOOR PROFILE
50S Aluminum Clear Anodize
S2I Aluminum Titanium Anodize
V12 Aluminum Black Matt Powder Coated
LU5 Aluminum Chrome Anodize
S2R Aluminum Copper Anodize
S2Q Aluminum Gold Anodize
Other Colors and Lengths Available FROM ITALY

PORTE EN ALUMINIUM 20X20 POUR VERRE COLLÉ

PROFILÉ EN ALUMINIUM POUR PORTE
50S Aluminium Clair Anodisé
S2I Aluminium Titanium Anodize
V12 Aluminium Noir Mat Peint à Poudre
LU5 Aluminium Chrome Anodisé
S2R Aluminium Cuivre Anodisé
S2Q Aluminium Or Anodisé
Autres Couleurs et Longueurs Disponibles DE L'ITALIE

PUERTA ALUMINIO 20X20 PARA VIDRIO PEGADO

PERFILES EN ALUMINIO PARA PUERTAS
50S Aluminio Anodizado Claro
S2I Aluminio Anodizado Titanio
V12 Aluminio Negro Mate Barnizado
LU5 Aluminio Anodizado Chrome
S2R Aluminio Anodizado Cobre
S2Q Aluminio Anodizado Oro
Otros Colores y Dimensiones DE ITALIA

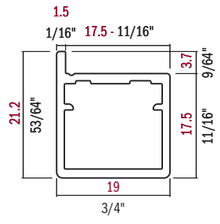

COLORS	ITEM NUMBER	LENGTH mm	LENGTH inch	PCS PER BOX	BOX DIMENSION mm W x D x H	BOX DIMENSION inch W x D x H	BOX WEIGHT KG	BOX WEIGHT LB	STOCK IN AMERICA MSRP PRICING USD METER	FOOT	EACH	BOX
50S	UR263650SL41	4100	161 7/16"	10	4150 x 145 x 45	163 3/8" x 5 3/4" x 1 3/4"	13.35	29.43	24.583	7.493	100.790	1007.903
S2I	UR2636S2IL41	4100	161 7/16"	10	4150 x 145 x 45	163 3/8" x 5 3/4" x 1 3/4"	13.35	29.43	29.108	8.872	119.343	1193.428
V12	UR2636V12L41	4100	161 7/16"	10	4150 x 145 x 45	163 3/8" x 5 3/84" x 1 3/4"	13.35	29.43	27.705	8.444	113.591	1135.905
									AVAILABLE FROM ITALY MSRP PRICING USD			
LU5	R2636LU5L41	4100	161 7/16"		<<<<< MINIMUM ORDER AND PACKAGING TO BE CONFIRMED >>>>>				31.649	9.647	129.761	
S2R	R2636S2RL41	4100	161 7/16"		<<<<< MINIMUM ORDER AND PACKAGING TO BE CONFIRMED >>>>>				37.426	11.407	153.447	
S2Q	R2636S2QL41	4100	161 7/16"		<<<<< MINIMUM ORDER AND PACKAGING TO BE CONFIRMED >>>>>				37.426	11.407	153.447	

2582

ALUMINIUM HANDLE PROFILE

ALUMINIUM HANDLE PROFILE
50S Aluminum Clear Anodize
S2I Aluminum Titanium Anodize
V12 Aluminum Black Matt Powder Coated
LU5 Aluminum Chrome Anodize
S2R Aluminum Copper Anodize
S2Q Aluminum Gold Anodize
Other Colors and Lengths Available FROM ITALY

PROFIL DE POIGNÉE

PROFIL DE POIGNÉE EN ALUMINIUM
50S Aluminium Clair Anodisé
S2I Aluminium Titanium Anodize
V12 Aluminium Noir Mat Peint à Poudre
LU5 Aluminium Chrome Anodisé
S2R Aluminium Cuivre Anodisé
S2Q Aluminium Or Anodisé
Autres Couleurs et Longueurs Disponibles DE L'ITALIE

PERFIL TIRADOR

PERFIL TIRADOR DE ALUMINIO
50S Aluminio Anodizado Claro
S2I Aluminio Anodizado Titanio
V12 Aluminio Negro Mate Barnizado
LU5 Aluminio Anodizado Chrome
S2R Aluminio Anodizado Cobre
S2Q Aluminio Anodizado Oro
Otros Colores y Dimensiones DE ITALIA

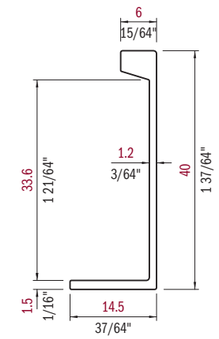

COLORS	ITEM NUMBER	LENGTH mm	LENGTH inch	KIT PER BOX	BOX DIMENSION mm W x D x H	BOX DIMENSION inch W x D x H	BOX WEIGHT KG	BOX WEIGHT LB	STOCK IN AMERICA MSRP PRICING USD METER	FOOT	KIT	BOX
50S	UCF.2582-50S	110	4 5/16"	10	220 x 190 x 160	8 5/8" x 7 1/2" x 6 1/4"	1	2.20			21.750	217.500
S2I	UCF.2582-S2I	110	4 5/16"	10	220 x 190 x 160	8 5/8" x 7 1/2" x 6 1/4"	1	2.20			35.722	357.220
V12	UCF.2582-V12	110	4 5/16"	10	220 x 190 x 160	8 5/8" x 7 1/2" x 6 1/4"	1	2.20			21.750	217.500
									AVAILABLE FROM ITALY MSRP PRICING USD			
LU5	CF.2582-LU5	110	4 5/16"		<<<<< MINIMUM ORDER AND PACKAGING TO BE CONFIRMED >>>>>						19.693	
S2R	CF.2582-S2R	110	4 5/16"		<<<<< MINIMUM ORDER AND PACKAGING TO BE CONFIRMED >>>>>						31.498	
S2Q	CF.2582-S2Q	110	4 5/16"		<<<<< MINIMUM ORDER AND PACKAGING TO BE CONFIRMED >>>>>						31.498	

2637

ALUMINIUM HANDLE PROFILE

ALUMINIUM HANDLE PROFILE
(requires machining)
50S Aluminum Clear Anodize
S2I Aluminum Titanium Anodize
V12 Aluminum Black Matt Powder Coated
LU5 Aluminum Chrome Anodize
S2R Aluminum Copper Anodize
S2Q Aluminum Gold Anodize
Other Colors and Lengths Available FROM ITALY

PROFIL DE POIGNÉE EN ALUMINIUM

(nécessite un usinage)
50S Aluminium Clair Anodisé
S2I Aluminium Titanium Anodize
V12 Aluminium Noir Mat Peint à Poudre
LU5 Aluminium Chrome Anodisé
S2R Aluminium Cuivre Anodisé
S2Q Aluminium Or Anodisé
Autres Couleurs et Longueurs Disponibles DE L'ITALIE

PERFIL TIRADOR DE ALUMINIO

(requiere mecanizado)
50S Aluminio Anodizado Claro
S2I Aluminio Anodizado Titanio
V12 Aluminio Negro Mate Barnizado
LU5 Aluminio Anodizado Chrome
S2R Aluminio Anodizado Cobre
S2Q Aluminio Anodizado Oro
Otros Colores y Dimensiones DE ITALIA

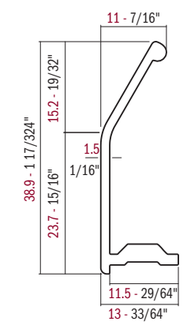

COLORS	ITEM NUMBER	LENGTH mm	LENGTH inch	KIT PER BOX	BOX DIMENSION mm W x D x H	BOX DIMENSION inch W x D x H	BOX WEIGHT KG	BOX WEIGHT LB	STOCK IN AMERICA MSRP PRICING USD METER	FOOT	KIT	BOX
50S	UCF.2637-50S	120	4 3/4"	10	220 x 190 x 160	8 5/8" x 7 1/2" x 6 1/4"	1	2.20			21.750	217.500
S2I	UCF.2637-S2I	120	4 3/4"	10	220 x 190 x 160	8 5/8" x 7 1/2" x 6 1/4"	1	2.20			35.722	357.220
V12	UCF.2637-V12	120	4 3/4"	10	220 x 190 x 160	8 5/8" x 7 1/2" x 6 1/4"	1	2.20			21.750	217.500
									AVAILABLE FROM ITALY MSRP PRICING USD			
LU5	CF.2637-LU5	120	4 3/4"		<<<<< MINIMUM ORDER AND PACKAGING TO BE CONFIRMED >>>>>						19.693	
S2R	CF.2637-S2R	120	4 3/4"		<<<<< MINIMUM ORDER AND PACKAGING TO BE CONFIRMED >>>>>						31.498	
S2Q	CF.2637-S2Q	120	4 3/4"		<<<<< MINIMUM ORDER AND PACKAGING TO BE CONFIRMED >>>>>						31.498	

NEWS 2023 _ REV. 2023 - 07 - 01
scilm AMERICA

Notes

Conversion Table

1" = 25.4 millimeters 1 millimeters = 0.3937"

inch		mm
1/64"	0.0156"	0.397
1/32"	0.0313"	0.794
3/64"	0.0469"	1.191
1/16"	0.0625"	1.588
5/64"	0.0781"	1.984
3/32"	0.0938"	2.381
7/64"	0.1094"	2.778
1/8"	0.1250"	3.175
9/64"	0.1406"	3.572
5/32"	0.1563"	3.969
11/64"	0.1719"	4.366
3/16"	0.1875"	4.763
13/64"	0.2031"	5.159
7/32"	0.2188"	5.556
15/64"	0.2344"	5.953
1/4"	0.2500"	6.350

inch		mm
17/64"	0.2656"	6.747
9/32"	0.2813"	7.144
19/64"	0.2969"	7.541
5/16"	0.3125"	7.938
21/64"	0.3281"	8.334
11/32"	0.3438"	8.731
23/64"	0.3594"	9.128
3/8"	0.3750"	9.525
25/64"	0.3906"	9.922
13/32"	0.4063"	10.319
27/64"	0.4219"	10.716
7/16"	0.4375"	11.113
29/64"	0.4531"	11.509
15/32"	0.4688"	11.906
31/64"	0.4844"	12.303
1/2"	0.5000"	12.700

inch		mm
33/64"	0.5156"	13.097
17/32"	0.5313"	13.494
35/64"	0.5469"	13.891
9/16"	0.5625"	14.288
37/64"	0.5781"	14.684
19/32"	0.5938"	15.081
39/64"	0.6094"	15.478
5/8"	0.6250"	15.875
41/64"	0.6406"	16.272
21/32"	0.6563"	16.669
43/64"	0.6719"	17.066
11/16"	0.6875"	17.463
45/64"	0.7031"	17.859
23/32"	0.7188"	18.256
47/64"	0.7344"	18.653
3/4"	0.7500"	19.050

inch		mm
49/64"	0.7656"	19.447
25/32"	0.7813"	19.844
51/64"	0.7969"	20.241
13/16"	0.8125"	20.638
53/64"	0.8281"	21.034
27/32"	0.8438"	21.431
55/64"	0.8594"	21.828
7/8"	0.8750"	22.225
57/64"	0.8906"	22.622
29/32"	0.9063"	23.019
59/64"	0.9219"	23.416
15/16"	0.9375"	23.813
61/64"	0.9531"	24.209
31/32"	0.9688"	24.606
63/64"	0.9844"	25.003
1"	1.0000"	25.400

scilm AMERICA
furniture technology for kitchens

SCILM AMERICA HAS THE RIGHT TO INTRODUCE MODIFICATIONS WITHOUT NOTICE
SCILM AMERICA A LE DROIT D'APPORTER DES MODIFICATIONS SANS PRÉAVIS
SCILM AMERICA TIENE EL DERECHO DE INTRODUCIR MODIFICACIONES SIN PREVIO AVISO

Graphic: Bassodesign

scilm-america

scilmamerica

scilmamerica

scilm america inc.
1835 E HALLANDALE BCH BLVD - SUITE 590 - HALLANDALE BEACH
FL 33009, USA
T 954.323.0123 - F 954.281.5434
info@scilmamerica.com - www.scilmamerica.com