scilm®
AMERICA
furniture technology for kitchens

ITALIAN COMPONENTS FOR THE EUROPEAN DESIGN KITCHEN

CATALOG 2025

EFFECTIVE MARCH 1TH 2025

LEG LEVELERS, SOCKETS AND CLIPS	*PIEDS NIVELEURS, BASES ET ATTACHES*	PATAS DE NIVELACION, BASES Y PINZAS DE ZOCALO	13
TOE KICK AND ACCESSORIES	*COUP DE PIED ET ACCESSOIRES*	ZOCALO Y ACCESORIOS	23
"GOLA" PROFILES	*PROFILÉ "GOLA"*	PERFIL "GOLA"	33
DRIP PANS	*PROTECTION POUR LE MEUBLE SOUS VIER*	PROTECCI N PARA EL MUEBLE DE FREGADERO	75
CROSSBAR/RAIL PROFILES	*PROFILS CATENARIA*	CATENARIA PERFILES	81
DRAWER ACCESSORIES	*ACCESSOIRES DE TIROIRS*	ACCESSORIOS PARA CAJONES	87
BRACKETS AND SUPPORTS	*CROCHETS ET SUPPORTS*	SOPORTES Y APOYOS	99
ALUMINUM STRUCTURES	*STRUCTURES EN ALUMINIUM*	ESTRUCTURAS DE ALUMINIO	107
ALUMINUM STRUCTURES FOR CABINETS	*STRUCTURES EN ALUMINIUM POUR ARMOIRES*	ESTRUCTURAS DE ALUMINIO PARA ARMARIOS	131
STRIKE ALUMINUM SHELVING SYSTEM	*STRIKE SYSTÈME D'ÉTAGÈRES EN ALUMINIUM*	STRIKE DE ALUMINIO SISTEMA DE ESTANTERÍA	143
DOOR FRAMES	*CADRES DE PORTES*	MARCOS DE PUERTAS	153
BUMPERS, PLATES AND SCREWS	*PARE-CHOCS, PLAQUES ET VIS*	PARACHOQUES, PLACAS Y TORNILLOS	181

scilm®
AMERICA

Italian style for cabinets, available in America

Style italien pour les armoires, disponible en Amérique

Estilo italiano para los gabinetes, disponible en América

scilm®
[FURNITURE TECHNOLOGY]

We offer solutions and harmony.

Scilm has operated for over 45 years in the kitchen component market and supplies the major Italian and European brands. This success has been achieved thanks to technology, taste and the made in Italy style that distinguishes us. We do not only supply components but true systems and accessories suitable to build modern, practical and robust kitchens. We offer quality products for American homes that are quickly assembled, modular and render kitchens practically eternal.

The Scilm skills are focused on molding, plastic extrusion and coating. Scilm is also equipped with advanced CNC equipment for aluminum processing and a modern anodizing plant.

The products presented in this catalog are entirely made in Italy.

Scilm meets the most severe environmental regulations and has the ISO certification for quality and environmental systems.

Nous offrons des solutions et de l'harmonie.

Scilm est présent depuis plus de 45ans dans le marché des composantes de cuisine et fournis les plus grandes marques italiennes et européennes. Ce succès a été obtenu grâce à la technologie, le goût et le style fabriqué en Italy qui nous distingue. Nous ne fournissont pas seulement des composantes, mais de véritables systèmes et accessoires pour construire une cuisine moderne, pratique et robuste. Nous offrons des produits de qualité pour les foyers américains qui sont rapidement assemblés, modulaire et rendent les cuisines pratiquement éternel.

Les compétences de Scilm sont axées sur le moulage, l'extrusion de plastique et le revêtement. Scilm est également équipé d'équipement CNC de point pour la transformation d'aluminium et d'une usine moderne d'anodisation.

Les produits présentés dans ce catalogue sont entièrement fabriqués en Italie.

Scilm répond aux normes environnementales les plus sévères et dispose de la certification ISO pour la qualité et l'environnement.

Ofrecemos soluciones y la armonía.

Scilm ha operado por más de 45 años en el mercado de componentes de cocina y suministros de las grandes marcas italianas y europeas. Este éxito se ha logrado gracias a la tecnología, el gusto y la hizo en Italia el estilo que nos distingue. No sólo la oferta de artículos, sino verdaderos sistemas y accesorios para construir una cocina moderna, práctica y robusta. Queremos ofrecer productos de calidad para los hogares estadounidenses que son de montaje rápido, modular y hacer cocinas prácticamente eterna.

Las habilidades Scilm se centran en moldeo, extrusión de plásticos y recubrimientos. Scilm también está equipado con avanzados equipos de CNC para el procesamiento de aluminio anodizado y una planta moderna.

Los productos presentados en este catálogo son totalmente fabricados en Italia.

Scilm cumple con las regulaciones ambientales más graves y tiene la certificación ISO de calidad y sistema ambiental.

INNOVATION STARTS WITH SUSTAINABILITY

Innovation starts with sustainability.
Committed to sustainability, Scilm is aware of environmental protection policies and the health of its employees.
The company implements production processes to minimise all environmental impact while respecting the eco-system.
SCILM has redefined its products by introducing, twenty years ago, the use of lead-free PVC and completely recyclable aluminium, in line with the standards of modern modular kitchens.
The company focuses on alternative renewable sources and the production of clean energy while respecting the professional ethics that have always set it apart.

L'innovation a comme point de départ la durabilité.
Engagée dans le développement durable, Scilm a conscience des politiques de protection environnementale et de la santé de ses employés. La société met en place des procédés de fabrication en vue de minimiser toutes les répercussions environnementales tout en respectant l'écosystème.
SCILM a redéfini ses produits en introduisant, il y a vingt ans, l'utilisation du PVC sans plomb et l'aluminium complètement recyclable, conformément aux normes des cuisines modulaires modernes. La société se concentre sur les sources renouvelables alternatives et la production d'énergie propre tout en respectant l'éthique professionnelle qui l'a toujours distinguée.

La innovación comienza por la sostenibilidad.
Comprometida con la sostenibilidad, Scilm es consciente de las políticas de protección del medio ambiente y la salud de sus empleados. La empresa implementa procesos de producción para minimizar el impacto medioambiental al tiempo que se respeta el ecosistema.
Hace veinte años, SCILM ha redefinido sus productos introduciendo el uso de PVC sin plomo y aluminio completamente reciclable, en línea con las normas de las modernas cocinas modulares. La empresa se centra en fuentes renovables alternativas y en la producción de energías limpias al tiempo que respeta la ética profesional que desde siempre la ha diferenciado.

45 YEARS OF QUALITY

Our forty-five years of highly specialied experience
in the modular kitchen sector have lead to attention to details,
precision, sophisticated technology, ethics and aesthetics.

In a word: quality.

Scilm was the sixth company in Italy to obtain ICILA certification
in compliance with the standard UNI EN ISO 9001: 1994,
the specific certification for the furniture sectors and woodworking
production chain.

It assesses the conformity of the entire production line
with criteria of efficiency, effectiveness and sustainability.

Scilm currently has UNI ISO 9001, UNI EN ISO 14001,
Code of Ethics Legislative Decree no. 231/01
and UNI-INAIL Safe Work certification,
thus confirming that its operational processes are implemented
in compliance with the parameters of quality,
correct environmental management and safety at work.

These certifications are important achievements but,
above all, they are the right credentials and worthy testimony
to our ongoing commitment.

We are acknowledged worldwide for this value-added feature.

scilm®
[FURNITURE TECHNOLOGY]

Exelent scilm

1 Aluminum structures

- WIDE CHOICE OF ALUMINIUM PROFILES
- AVAILABLE IN VARIOUS DIMENSIONS AND SECTIONS
- THEY CAN BE COMBINED WITH WOOD AND GLASS PANELS

2 Strike shelves

- MADE OF ALUMINIUM OR GLASS
- GREATER LOAD CAPACITY THAN STANDARD SHELVES
- AVAILABLE WITH BUILT-IN LEDS

3 Drawer accessories

- EASY TO INSTALL
- AVAILABLE IN DIFFERENT SIZES
- PERFECT PARTNER FOR A SPOTLESS KITCHEN

4 Toe kick and accessories

- THEY ALLOW THE PLINTH TO BE EASILY RELEASED
- SPEED UP CLEANING OPERATIONS IMPROVING HYGIENE
- SUITABLE FOR ALL TYPES OF LEGS AND TOE KICK

5 Drip pans

- AVAILABLE IN ALUMINIUM AND THERMOFORMED PLASTIC
- GASKETS WITH TO ANTIBACTERIAL TREATMENT
- IT CAN FIT ANY PIECE OF FURNITURE

6 Plan.a door

- STREAMLINED ALUMINIUM STRUCTURE
- SHOCKPROOF JUNCTIONS THAT ELIMINATE SHARP EDGES
- DOES NOT ALTER HINGE ADJUSTMENTS AND ALIGNMENTS

7 Gola Profiles

- NO NEED TO DRILL HOLES IN CABINETS
- WIDE RANGE OF CUSTOMISATIONS AND FINISHES
- IDEAL FOR ALL AESTHETIC AND STRUCTURAL REQUIREMENTS

8 Crossbar/Rail profiles

- THEY CAN BE FITTED TO THE FRONT AND TO THE REAR
- EASY TO MOUNT ON ALL CABINETS
- PROFILES CAN BE CUSTOMISED

9 Legs

- HIGH PERFORMANCE COMBINED WITH HIGH RESISTANCE
- QUICK TO ASSEMBLE AND EASY TO ADJUST
- MADE OF HIGH-QUALITY PLASTIC

THE DIFFERENCE IN THE KITCHEN

LEG LEVELERS, SOCKETS AND CLIPS

LEG LEVELERS, SOCKETS AND CLIPS

Why...
It's the best way to install your cabinets.

- Quick to install, no tools required
- Cabinets built on Legs are easier to handle and have less chances of being damaged
- Cabinets on legs are easier to pack, stack and ship
- Cabinet protection against water and dirt
- Legs provide easy access for electrical, plumbing and cleaning
- Water resistant
- Lower cost than toe kick notched gables

PIEDS NIVELEURS, BASES ET ATTACHES

Pourquoi...
C'est la meilleure façon d'installer vos armoires.

- *Rapide à installer, aucun outils nécessaire*
- *Les armoires construits sur pied niveleur sont plus faciles à manipuler et ont moins de chances d'être endommagé*
- *Les armoires construits sur pied niveleur sont plus faciles à emballer, empiler et expédier*
- *Le pied niveleur permet un accès facile pour l'électricité, la plomberie et le nettoyage*
- *Protection d'armoires contre l'eau et la saleté*
- *Résistant à l'eau*
- *Coûts inférieur qu'armoire aux côtés encoché pour coup de pied*

PATAS DE NIVELACION, BASES Y PINZAS DE ZOCALO

Por qué...
Esta es la major forma de instalar sus muebles

- Rápido de instalar, no requiere herramientas
- Los muebles construidos sobre patas son más fáciles de manejar y tienen menos probabilidades de sufrir daños
- Los muebles con las patas son más fáciles de empaquetar, apilar y transportar
- Protección de los muebles contra el agua y la suciedad
- Las patas facilitan el acceso a la electricidad, fontaneria y facilitan la limpieza
- Resistente al agua
- Cuesta menos que la fabricación de paneles laterales con muescas para socalos de madera

LEG LEVELERS, SOCKETS AND CLIPS

Technical Specifications...
- Material: High quality PVC composition
- Performance: 882 lbs (400 kgs) weight resistance per leg
- Environment: 100% recyclable materials, Lead Free PVC

PIEDS NIVELEURS, BASES ET ATTACHES

Spécifications Techniques...
- *Matériel: Composition de PVC de haute qualité*
- *Performance: 882 lbs (400 kgs) résistance au poids par pied*
- *Environnement: Matériaux 100% recyclables, PVC Sans Plomb*

PATAS DE NIVELACION, BASES Y PINZAS DE ZOCALO

Especificaciones Técnicas...
- Material: Composición de PVC de alta calidad
- Rendimiento: 882 libras (400 kg) resistencia el peso por pata
- Medio Ambiente: Materiales 100% reciclables, PVC sin plomo

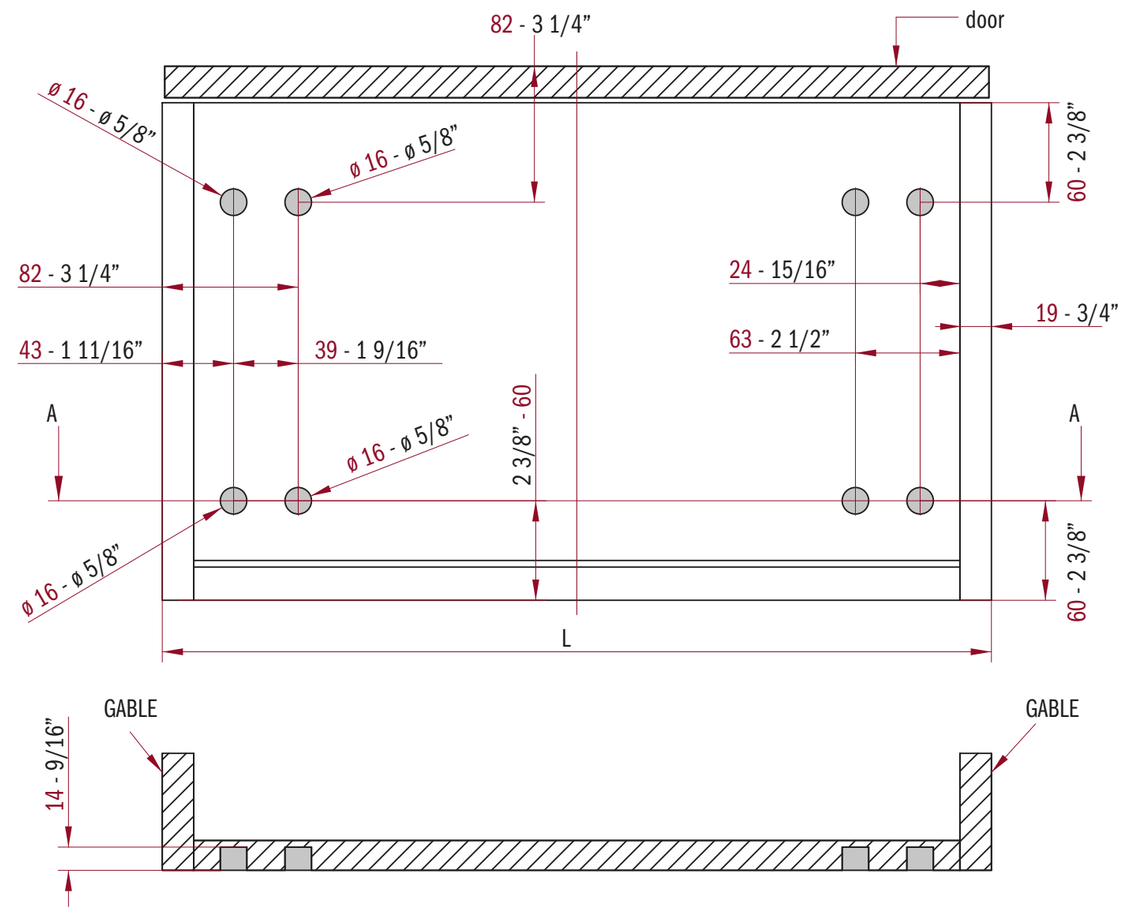

250FR28C

LEG LEVELERS, SOCKETS AND CLIPS

PVC LEG LEVELER
Adjustment 10mm - 3/8"
Other Sizes Available FROM ITALY

To be used with socket
RBA74S
RBA76S
RBA85

PIEDS NIVELEURS, BASES ET ATTACHES

PIED NIVELEUR EN PVC
Réglage 10mm - 3/8"
Autres Dimensions Disponibles DE L'ITALIE

Pour être utilisé avec la base
RBA74S
RBA76S
RBA85

PATAS DE NIVELACION, BASES Y PINZAS DE ZOCALO

PATA DE REGULACION DE PVC
Regulacion de 10mm - 3/8"
Otras Dimensiones Posibles FROM ITALY

Para ser utilizado con la base
RBA74S
RBA76S
RBA85

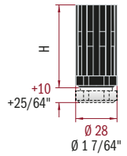

ITEM NUMBER	HEIGHT mm	HEIGHT inch	PCS PER BOX	BOX DIMENSION mm W x D x H	BOX DIMENSION inch W x D x H	BOX WEIGHT KG	BOX WEIGHT LB	STOCK IN AMERICA MSRP PRICING USD EACH	STOCK IN AMERICA MSRP PRICING USD BOX
U250FR28C06SF	60 - 70	2 3/8" - 2 3/4"	150	400 x 300 x 200	15 3/4" x 11 3/4" x 7 7/8"	5.00	11.02	1.126	168.900

250FR52

PVC LEG LEVELER
Adjustment, 30mm - 1 1/4"
Other Sizes Available FROM ITALY

To be used with socket
RBA74S
RBA76S
RBA85

PIED NIVELEUR EN PVC
Réglage, 30mm - 1 1/4"
Autres Dimensions Disponibles DE L'ITALIE

Pour être utilisé avec la base
RBA74S
RBA76S
RBA85

PATA DE REGULACION DE PVC
Regulacion de 30.mm - 1 1/4"
Otras Dimensiones Posibles FROM ITALY

Para ser utilizado con la base
RBA74S
RBA76S
RBA85

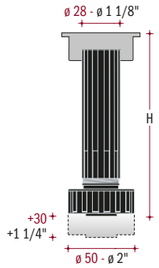

ITEM NUMBER	HEIGHT mm	HEIGHT inch	PCS PER BOX	BOX DIMENSION mm W x D x H	BOX DIMENSION inch W x D x H	BOX WEIGHT KG	BOX WEIGHT LB	STOCK IN AMERICA MSRP PRICING USD EACH	STOCK IN AMERICA MSRP PRICING USD BOX
U250FR5210SF	100 - 130	3 15/16" - 5 1/8"	100	400 x 300 x 200	15 3/4" x 11 3/4" x 7 7/8"	4.50	9.92	1.269	126.900
U250FR5211SF	110 - 140	4 5/16" - 5 1/2"	100	400 x 300 x 200	15 3/4" x 11 3/4" x 7 7/8"	5.00	11.02	1.137	113.700
U250FR5212SF	120 - 150	4 3/4" - 5 7/8"	100	400 x 300 x 200	15 3/4" x 11 3/4" x 7 7/8"	5.00	11.02	1.165	116.500
U250FR5214SF	140 - 170	5 1/2" - 6 11/16"	100	400 x 300 x 300	15 3/4" x 11 3/4" x 11 3/4"	5.50	12.13	1.240	124.000
U250FR5215SF	150 - 180	5 7/8" - 7 1/16"	100	400 x 300 x 300	15 3/4" x 11 3/4" x 11 3/4"	5.50	12.13	1.257	125.700
								AVAILABLE FROM ITALY MSRP PRICING USD	
250FR5217SF	170 - 200	6 11/16" - 7 7/8"		<<<<< MINIMUM ORDER AND PACKAGING TO BE CONFIRMED >>>>>				1.046	

270FR270

PVC LEG LEVELER
Adjustment, 15mm - 5/8"
Other Sizes Available FROM ITALY

To be used with socket
RBA74S
RBA85

PIED NIVELEUR EN PVC
Réglage, 15mm - 5/8"
Autres Dimensions Disponibles DE L'ITALIE

Pour être utilisé avec la base
RBA74S
RBA85

PATA DE REGULACION DE PVC
Regulacion de 15 mm - 5/8"
Otras Dimensiones Disponibles DE ITALIA

Para ser utilizado con la base
RBA74S
RBA85

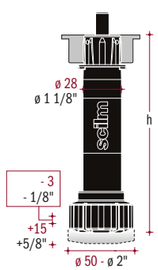

ITEM NUMBER	HEIGHT mm	HEIGHT inch	PCS PER BOX	BOX DIMENSION mm W x D x H	BOX DIMENSION inch W x D x H	BOX WEIGHT KG	BOX WEIGHT LB	STOCK IN AMERICA MSRP PRICING USD EACH	STOCK IN AMERICA MSRP PRICING USD BOX
U270FR27010SF	097 - 115	3 3/16" - 4 1/2"	100	400 x 300 x 200	15 3/4" x 11 3/4" x 7 7/8"	4.00	8.82	1.020	102.000
U270FR27011SF	107 - 125	4 3/16" - 4 15/16"	100	400 x 300 x 200	15 3/4" x 11 3/4" x 7 7/8"	4.20	9.26	1.117	111.700
U270FR27012SF	117 - 135	4 5/8" - 5 5/16"	100	400 x 300 x 200	15 3/4" x 11 3/4" x 7 7/8"	4.30	9.48	1.145	114.500
U270FR27015SF	147 - 165	5 13/16" - 6 1/2"	100	400 x 300 x 300	15 3/4" x 11 3/4" x 11 3/4"	4.50	9.92	1.096	109.600

280R270

LEG LEVELERS, SOCKETS AND CLIPS

PVC LEG LEVELER
Adjustment, 15mm - 5/8"
Other Sizes Available FROM ITALY

Does not require the use of the socket

PIEDS NIVELEURS, BASES ET ATTACHES

PIED NIVELEUR EN PVC
Réglage, 15mm - 5/8"
Autres Dimensions Disponibles DE L'ITALIE

Ne nécessite pas l'utilisation de la base

PATAS DE NIVELACION, BASES Y PINZAS DE ZOCALO

PATA DE REGULACION DE PVC
Reglacion 15mm - 5/8"
Otras Dimensiones Disponibles DE ITALIA

No requiere el uso de la base

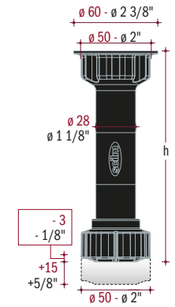

ITEM NUMBER	HEIGHT mm	HEIGHT inch	PCS PER BOX	BOX DIMENSION mm W x D x H	BOX DIMENSION inch W x D x H	BOX WEIGHT KG	BOX WEIGHT LB	STOCK IN AMERICA MSRP PRICING USD EACH	STOCK IN AMERICA MSRP PRICING USD BOX
U280R27010SF	097 - 115	3 3/16" - 4 1/2"	100	400 x 300 x 300	15 3/4" x 11 3/4" x 11 3/4"	4.50	9.92	0.908	90.800
U280R27012SF	117 - 135	4 5/8" - 5 5/16"	100	400 x 300 x 300	15 3/4" x 11 3/4" x 11 3/4"	5.00	11.02	0.926	92.600
U280R27015SF	147 - 165	5 13/16" - 6 1/2"	150	500 x 400 x 300	19 5/8" x 15 3/4" x 11 3/4"	8.25	18.19	0.955	143.250

RBA74S

SOCKET FOR LEG LEVELER
Expansion Type with Peg

BASE POUR PIED NIVELEUR
Type à Expansion avec Cheville

BASE PARA PATA DE REGULACION
Tipo de Expansion con Clavija

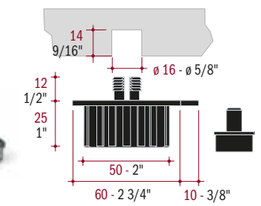

ITEM NUMBER	PCS PER BOX	BOX DIMENSION mm W x D x H	BOX DIMENSION inch W x D x H	BOX WEIGHT KG	BOX WEIGHT LB	STOCK IN AMERICA MSRP PRICING USD EACH	STOCK IN AMERICA MSRP PRICING USD BOX
URBA74S	200	400 x 300 x 300	15 3/4" x 11 3/4" x 11 3/4"	5.50	12.13	0.714	142.800

RBA85

TRIANGULAR EXPANSION SOCKET FOR LEG LEVELER

BASE TRIANGULAIRE POUR PIED NIVELEUR

BASE TRIAGULAR DE REGULACION

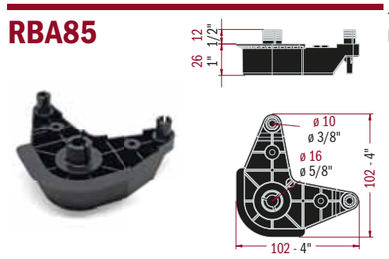

ITEM NUMBER	PCS PER BOX	BOX DIMENSION mm W x D x H	BOX DIMENSION inch W x D x H	BOX WEIGHT KG	BOX WEIGHT LB	STOCK IN AMERICA MSRP PRICING USD EACH	STOCK IN AMERICA MSRP PRICING USD BOX
URBA85-02	100	400 x 300 x 300	15 3/4" x 11 3/4" x 11 3/4"	4.50	9.92	0.776	77.600

RBA76S

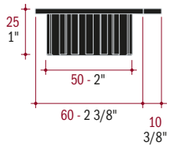

SOCKET FOR LEG LEVELER
Screwed Type with Peg

BASE POUR PIED NIVELEUR
Type à Visser avec Cheville

BASE PARA PATA DE REGULACION
Tipo de Expansion con Clavija

ITEM NUMBER	PCS PER BOX	BOX DIMENSION mm W x D x H	BOX DIMENSION inch W x D x H	BOX WEIGHT KG	BOX WEIGHT LB	STOCK IN AMERICA MSRP PRICING USD EACH	STOCK IN AMERICA MSRP PRICING USD BOX
URBA76S	200	400 x 300 x 200	15 3/4" x 11 3/4" x 7 7/8"	6.00	13.23	0.731	146.200

VPF

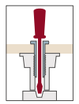

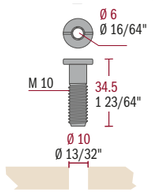

DRILLED SCREW M10 FOR SOCKET

VIS PERCÉ M10 POUR BASE

TORNILLOS M10 PARA BASE

ITEM NUMBER	PCS PER BOX	BOX DIMENSION mm W x D x H	BOX DIMENSION inch W x D x H	BOX WEIGHT KG	BOX WEIGHT LB	STOCK IN AMERICA MSRP PRICING USD EACH	STOCK IN AMERICA MSRP PRICING USD BOX
UVPF00000000	100	150 x 100 x 90	5 7/8" x 3 7/8" x 3 1/2"	2.50	5.51	0.717	71.700

PRAF

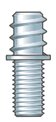

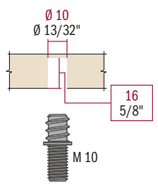

BOLT M10/D12.5 FOR SOCKETS
for Wood

BOULON M10/D12.5 POUR BASE
pour Bois

PERNO M10/D12,5 PARA BASE
para Madera

ITEM NUMBER	PCS PER BOX	BOX DIMENSION mm W x D x H	BOX DIMENSION inch W x D x H	BOX WEIGHT KG	BOX WEIGHT LB	STOCK IN AMERICA MSRP PRICING USD EACH	STOCK IN AMERICA MSRP PRICING USD BOX
UPRAF10/10MA	100	150 x 100 x 90	5 7/8" x 3 7/8" x 3 1/2"	2.00	4.41	0.674	67.400

KIT PIED

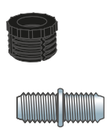

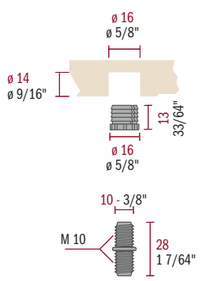

BUSHING AND BOLT FOR SOCKETS
Bushing BI6046SF (100pcs)
+ Bolt PR10MA-C28 (100pcs)

DOUILLE ET BOULON POUR BASE
Douille BI6046SF (100pcs)
+ Boulon PR10MA-C28 (100pcs)

BOTELLA Y TORNILLO ROSCADO PARA FIJACIÓN BASE
Botella BI6046SF (100pcs)
+ Tornillo Roscado PR10MA-C28 (100pcs)

ITEM NUMBER	KIT PER BOX	BOX DIMENSION mm W x D x H	BOX DIMENSION inch W x D x H	BOX WEIGHT KG	BOX WEIGHT LB	STOCK IN AMERICA MSRP PRICING USD KIT	STOCK IN AMERICA MSRP PRICING USD BOX
UKIT.PIED.001	1	150 x 100 x 90	5 7/8" x 3 7/8" x 3 1/2"	2.00	4.41	76.001	76.001

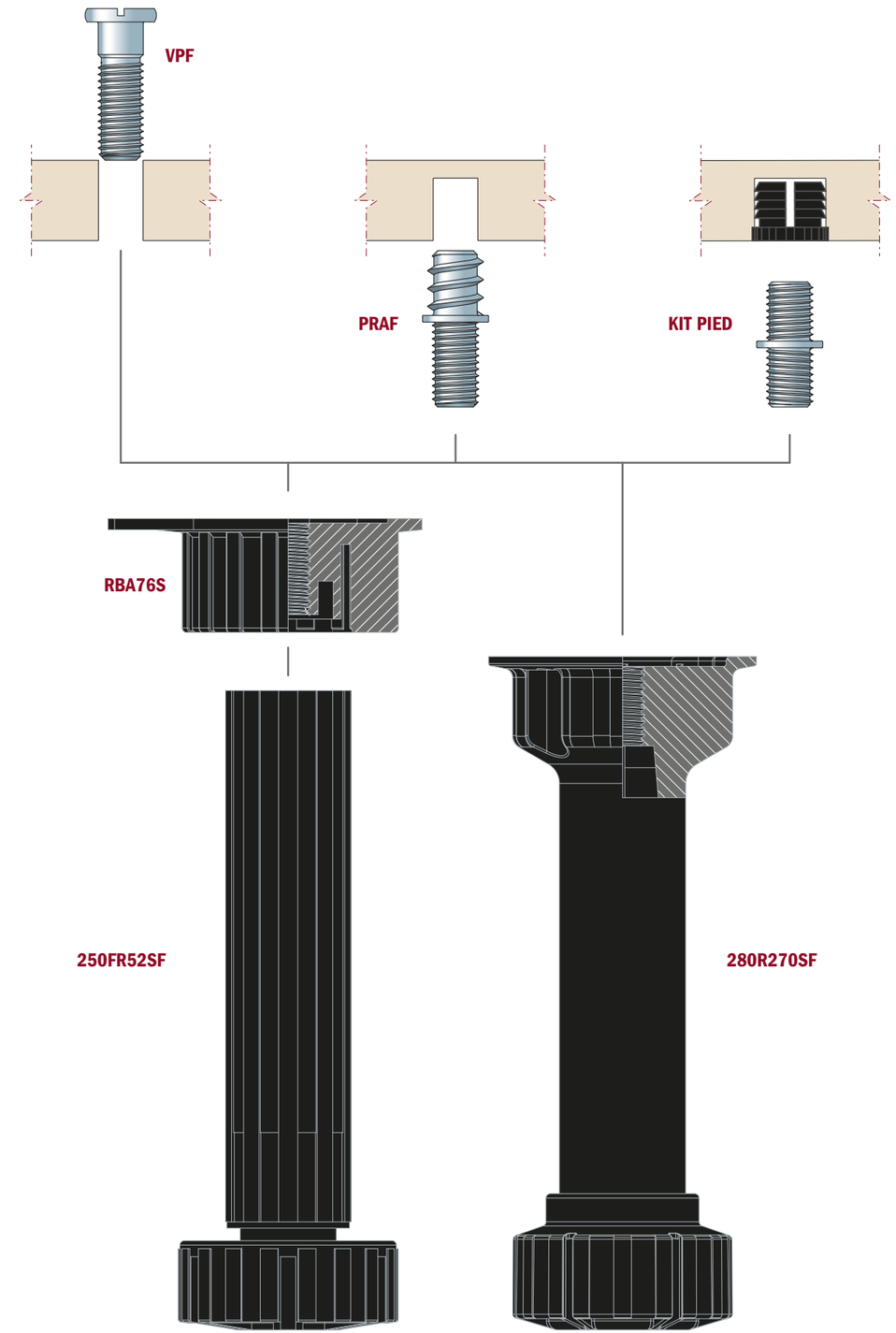

LEG LEVELERS, SOCKETS AND CLIPS

PIEDS NIVELEURS, BASES ET ATTACHES

PATAS DE NIVELACION, BASES Y PINZAS DE ZOCALO

GZR58

CLIP WITH PLATE FOR LEG LEVELER AND TOE KICK
01 for Grooved Wood
02 Twist-on, Locks into PVC or Aluminum
03 with Holes, to be Screwed

ATTACHE AVEC PLAQUE POUR PIED NIVELEUR ET COUP DE PIED
01 pour Bois Rainuré
02 Twist-On, se verrouille sur le PVC ou l'Aluminium
03 avec Trous, à Visser

GANCHO ZOCALO CON BASE PARA ZOCALO
01 para madera ranurada
02 con Sistema de Giro dentro de la ranura de PVC or Aluminio
03 para Atornillara

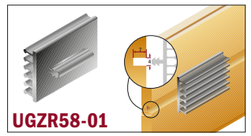

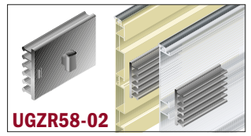

ITEM NUMBER	PCS PER BOX	BOX DIMENSION mm W x D x H	BOX DIMENSION inch W x D x H	BOX WEIGHT KG	BOX WEIGHT LB	STOCK IN AMERICA MSRP PRICING USD EACH	STOCK IN AMERICA MSRP PRICING USD BOX
UGZR58-01	100	600 x 170 x 120	23 5/8" x 6 3/4" x 4 3/4"	1.50	3.31	0.518	51.800
UGZR58-01/C	700	500 x 400 x 300	19 5/8" x 15 3/4" x 11 3/4"	10.00	22.05	0.326	228.200
UGZR58-02	100	600 x 170 x 120	23 5/8" x 6 3/4" x 4 3/4"	1.50	3.31	0.518	51.800
UGZR58-02/C	700	500 x 400 x 300	19 5/8" x 15 3/4" x 11 3/4"	10.00	22.05	0.326	228.200
UGZR58-03	100	600 x 170 x 120	23 5/8" x 6 3/4" x 4 3/4"	1.50	3.31	0.518	51.800
UGZR58-03/C	700	500 x 400 x 300	19 5/8" x 15 3/4" x 11 3/4"	10.00	22.05	0.326	228.200

GZR54

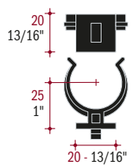

CLIP WITHOUT PLATE FOR LEG LEVELER AND TOE KICK

ATTACHE SANS PLAQUE POUR PIED NIVELEUR ET COUP DE PIED

GANCHO ZOCALO SIN BASE PARA PATA Y ZOCALO

ITEM NUMBER	PCS PER BOX	BOX DIMENSION mm W x D x H	BOX DIMENSION inch W x D x H	BOX WEIGHT KG	BOX WEIGHT LB	STOCK IN AMERICA MSRP PRICING USD EACH	STOCK IN AMERICA MSRP PRICING USD BOX
UGZR54	100	220 x 165 x 140	8 5/8" x 6 1/2" x 5 1/2"	0.50	1.10	0.517	51.700
UGZR54/C	1500	400 x 300 x 200	15 3/4" x 11 3/4" x 7 7/8"	5.00	11.02	0.201	301.500

GZR60-02

MAGNETIC CLIP WITH METAL PLATE FOR LEG LEVELER
(For foiled pvc and aluminum toe kick)

ATTACHE MAGNÉTIQUE AVEC PLAQUE EN MÉTAL POUR PIED NIVELEUR
(Pour coup de pied en pvc recouvert et aluminium)

GANCHO ZOCALO MAGNÉTICO CON BASE METALICAS PARA PATA
(Para zocalo de pvc revestido y aluminio)

ITEM NUMBER	PCS PER BOX	BOX DIMENSION mm W x D x H	BOX DIMENSION inch W x D x H	BOX WEIGHT KG	BOX WEIGHT LB	STOCK IN AMERICA MSRP PRICING USD EACH	STOCK IN AMERICA MSRP PRICING USD BOX
UCF.GZR60-02	20	215 x 115 x 100	8 1/2" x 4 1/2" x 3 7/8"	0.75	1.65	5.349	106.980

GZR60-03

MAGNETIC CLIP WITH METAL PLATE FOR LEG LEVELER
(For foiled wood toe kick)

ATTACHE MAGNÉTIQUE AVEC PLAQUE EN MÉTAL POUR PIED NIVELEUR
(Pour coup de pied en bois)

GANCHO ZOCALO MAGNÉTICO CON BASE METALICAS PARA PATA
(Para zocalo de madera)

ITEM NUMBER	PCS PER BOX	BOX DIMENSION mm W x D x H	BOX DIMENSION inch W x D x H	BOX WEIGHT KG	BOX WEIGHT LB	STOCK IN AMERICA MSRP PRICING USD EACH	STOCK IN AMERICA MSRP PRICING USD BOX
UCF.GZR60-03	20	215 x 115 x 100	8 1/2" x 4 1/2" x 3 7/8"	0.75	1.65	5.349	106.980

LEG LEVELERS, SOCKETS AND CLIPS

PIEDS NIVELEURS, BASES ET ATTACHES

PATAS DE NIVELACION, BASES Y PINZAS DE ZOCALO

CSP0258

CLIP TOE KICK REMOVAL TOOL (RED)

OUTIL POUR ENLEVER LE COUP DE PIED (ROUGE)

HERRAMIENTA DE ELIMINACION DE ZOCALO (ROJO)

ITEM NUMBER	PCS PER BOX	BOX DIMENSION mm W x D x H	BOX DIMENSION inch W x D x H	BOX WEIGHT KG	BOX WEIGHT LB	STOCK IN AMERICA MSRP PRICING USD EACH	STOCK IN AMERICA MSRP PRICING USD BOX
UCSP0258-59	20	215 x 115 x 100	8 1/2" x 4 1/2" x 3 7/8"	2.20	4.85	2.940	58.800

blink

reddot winner 2021

interzum Award
High product quality

THE DIFFERENCE IN THE KITCHEN

TOE KICK AND ACCESSORIES

Why...
If the Leg Leveler offers cabinet protection then the Toe Kick will provide an esthetical result.

- Quick to install, no tools required
- Easily removable for cleaning
- Water resistant
- Lower cost than traditional toe kick

Pourquoi...
Si le Pied Nivelleur offre une protection a l'armoire donc le coup de pied fournira un résultat esthétique.

- *Rapide à installer, aucun outils nécessaire*
- *Facilement amovibles pour le nettoyage*
- *Résistant à l'eau*
- *Coûts inférieur au coup de pied traditionnel*

Por qué...
Si la pata niveladora ofrece una proteccion al mueble, el zocalo proporciona un resultado estetico.

- Rápido de instalar, sin necesidad de herramientas
- Fácilmente extraíble para su limpieza
- Resistente al agua
- Cuesta menos que lo zocalo tradicionales

Technical Specifications...
- Material: Aluminum and PVC
- Performance: Aluminum extrusion with high quality anodized finishes and calibrated PVC extrusion with durable foiled coatings
- Environment: 100% recyclable aluminium, Lead Free PVC

Spécifications Techniques...
- *Matériel: Aluminium et PVC*
- *Performance: Extrusion d'aluminium avec finitions anodisées de haute qualité et PVC calibré recouvert de feuille d'aluminium*
- *Environnement: Aluminium 100% recyclable, PVC Sans Plomb*

Especificaciones Técnicas...
- Material: Aluminio y PVC
- Rendimiento: extrusión de aluminio con acabados anodizado de alta calidad y PVC calibrado revestido de lámina de aluminio
- Medio Ambiente: Aluminio 100% reciclable, PVC sin plomo

1

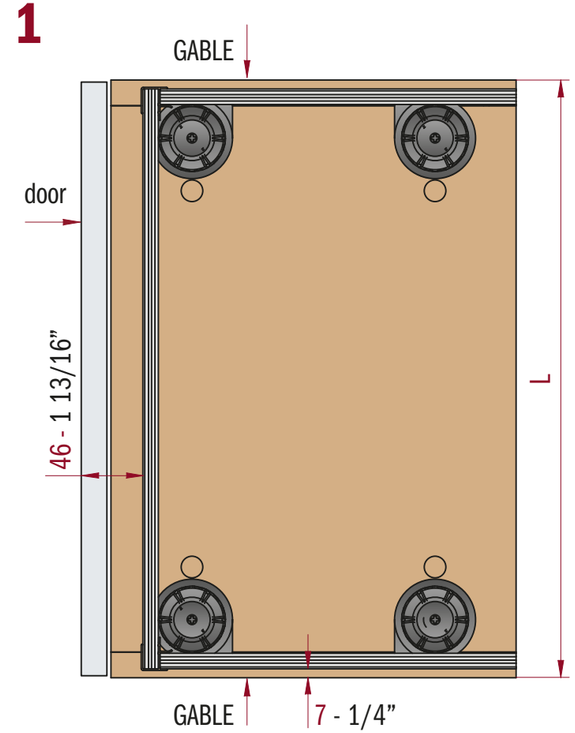

2

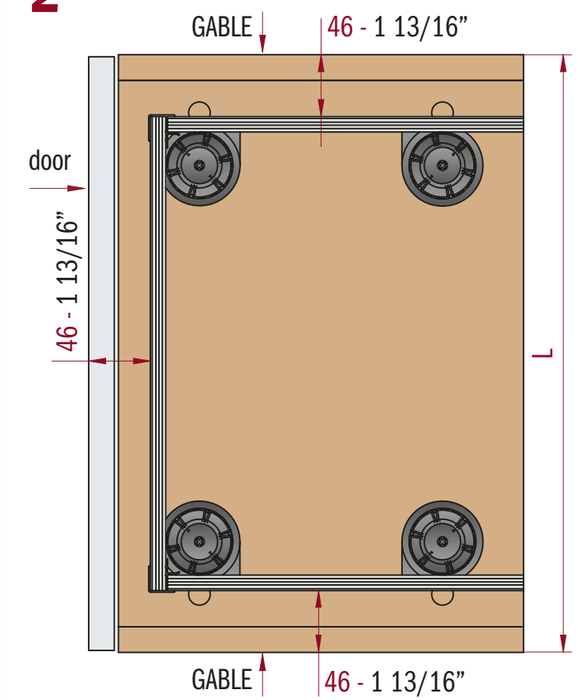

3

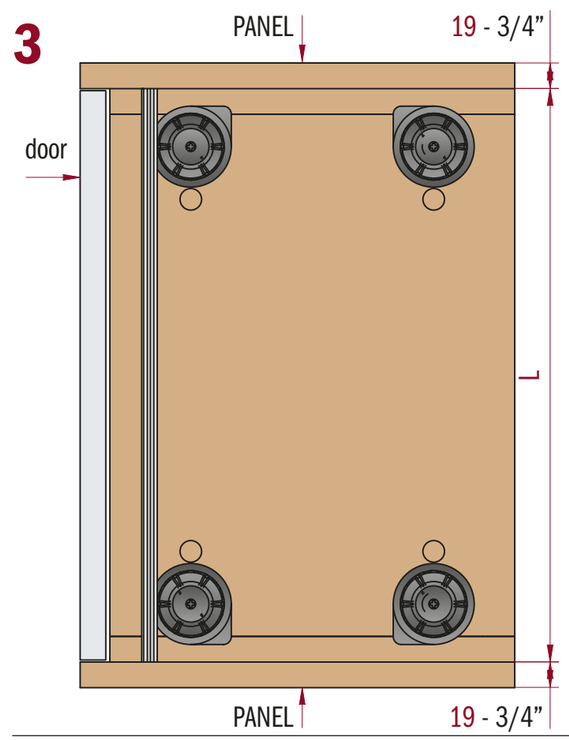

4

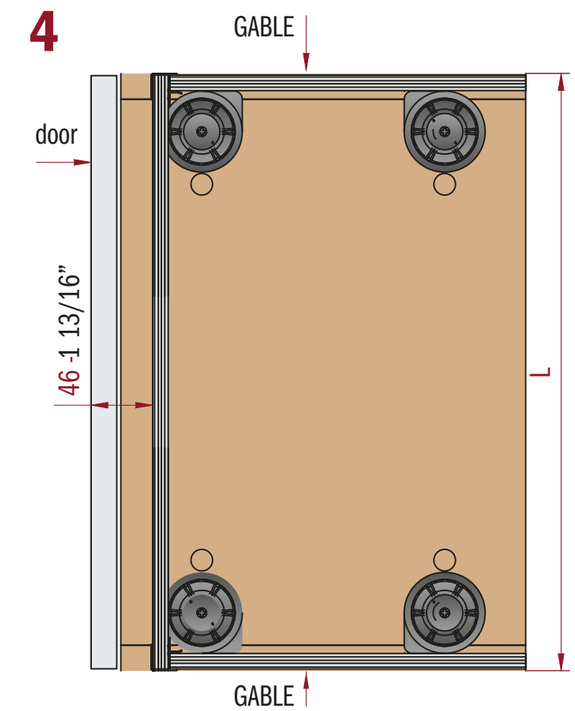

ALUMINUM FOIL COATINGS / *REVÊTEMENTS EN FEUILLE D'ALUMINIUM* / REVESTIMIENTOS DE ALUMINIO

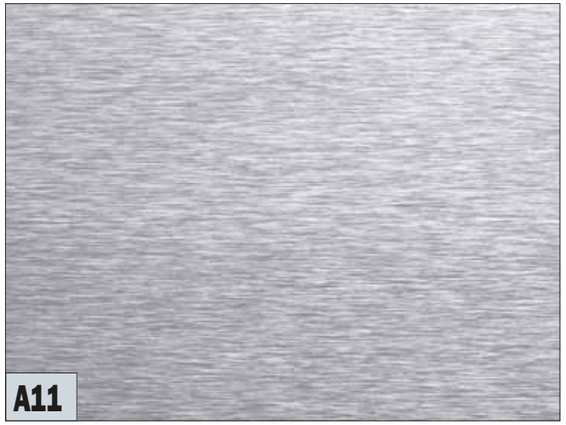

A11 Aluminum Foil Clear — *A11 Feuille Aluminium Clair* — A11 Folio de Aluminio Claro

A12 Aluminum Foil Stainless — *A12 Feuille Aluminium Inox* — A12 Folio de Aluminio Inox

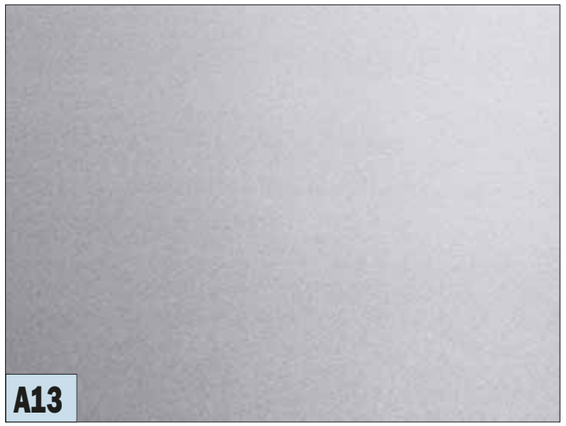

A13 Aluminum Foil Chrome — *A13 Feuille Aluminium Chrome* — *A13 Folio de Aluminio Cromado*

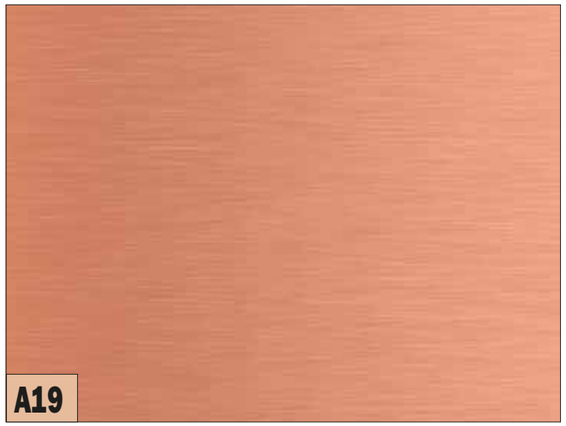

A19 aluminum foil copper — *A19 Feuille Aluminium cuivre* — *A19 Folio de Aluminio cobre*

A20 aluminum foil gold — *A20 Feuille Aluminium Or* — A20 Folio de aluminio oro

706 Melamine Foil Black — *706 Feuille de Mélamine Noire* — 706 Lámina de Melamina Negra

4600

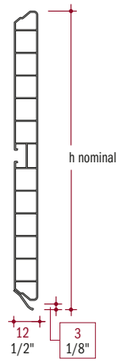

TOE KICK AND ACCESSORIES

FOILED PVC TOE KICK
A11 Aluminum Foil Clear
A12 Aluminum Foil Stainless
A13 Aluminum Foil Chrome
A19 Aluminum Foil Copper
A20 Aluminum Foil Gold
706 Black Matt (without Protective Film)
Other Colors and Sizes Available FROM ITALY

COUP DE PIED ET ACCESSOIRES

COUP DE PIED EN PVC RECOUVERT
A11 Feuille Aluminium Clair
A12 Feuille Aluminium Inox
A13 Feuille Aluminium Chrome
A19 Feuille Aluminium Cuivre
A20 Feuille Aluminium Or
706 Noir Mat (sans Pellicule Protectrice)
Autres Couleurs et Dimensions Disponibles DE L'ITALIE

ZOCALO Y ACESORIOS

ZOCALO DE PVC REVESTIDO
A11 Aluminio Claro
A12 Folio de Aluminio Inox
A13 Folio de Aluminio Cromado
A19 Folio de Aluminio Cobre
A20 Folio de Aluminio Oro
706 Negro Mate (sin Película Protectora)
Otros Colores y Dimensiones Disponibles DE ITALIA

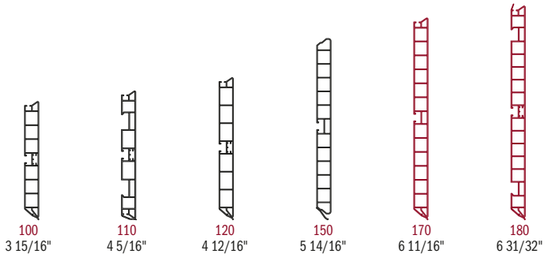

COLORS	ITEM NUMBER	HEIGHT		LENGTH		PCS PER BOX	BOX DIMENSION mm	BOX DIMENSION inch	BOX WEIGHT		STOCK IN AMERICA MSRP PRICING USD			
		mm	inch	mm	inch		W x D x H	W x D x H	KG	LB	METER	FOOT	EACH	BOX
A11	U460010A111RF	100	3 15/16"	2670	105 1/8"	10	2740 x 145 x 110	107 7/8" x 5 3/4" x 4 3/8"	11.50	25.35	9.641	2.939	25.741	257.415
A11	U460010A1101F	100	3 15/16"	4000	157 1/2"	10	4050 x 145 x 110	159 1/2" x 5 3/4" x 4 3/8"	18.00	39.68	9.534	2.906	38.136	381.360
A11	U460011A111RF	110	4 5/16"	2670	105 1/8"	11	2740 x 140 x 130	107 7/8" x 5 1/2" x 5 1/8"	14.00	30.86	11.555	3.522	30.852	339.370
A11	U460011A1101F	110	4 5/16"	4000	157 1/2"	10	4050 x 140 x 130	159 1/2" x 5 1/2" x 5 1/8"	19.00	41.89	11.474	3.497	45.896	458.960
A11	U460012A111RF	120	4 3/4"	2670	105 1/8"	10	2740 x 140 x 130	107 7/8" x 5 1/2" x 5 1/8"	14.00	30.86	11.341	3.457	30.280	302.805
A11	U460012A1101F	120	4 3/4"	4000	157 1/2"	10	4050 x 140 x 130	159 1/2" x 5 1/2" x 5 1/8"	20.50	45.19	10.769	3.282	43.076	430.760
A11	U460015A111RF	150	5 7/8"	2670	105 1/8"	9	2740 x 160 x 120	107 7/8" x 6 1/4" x 4 3/4"	15.00	33.07	12.879	3.926	34.387	309.482
A11	U460015A1101F	150	5 7/8"	4000	157 1/2"	9	4050 x 160 x 120	159 1/2" x 6 1/4" x 4 3/4"	22.50	49.60	13.020	3.968	52.080	468.720
											AVAILABLE FROM ITALY MSRP PRICING USD			
A11	R460017A1101F	170	6 11/16"	4000	157 1/2"		<<<<< MINIMUM ORDER AND PACKAGING TO BE CONFIRMED >>>>>				15.751	4.801	63.004	
A11	R460018A1101F	180	7 1/16"	4000	157 1/2"		<<<<< MINIMUM ORDER AND PACKAGING TO BE CONFIRMED >>>>>				17.624	5.372	70.496	
A12	U460010A121RF	100	3 15/16"	2670	105 1/8"	10	2740 x 145 x 110	107 7/8" x 5 3/4" x 4 3/8"	11.50	25.35	10.900	3.322	29.103	291.030
A12	U460010A1201F	100	3 15/16"	4000	157 1/2"	10	4050 x 145 x 110	159 1/2" x 5 3/4" x 4 3/8"	18.00	39.68	10.768	3.282	43.072	430.720
A12	U460011A121RF	110	4 5/16"	2670	105 1/8"	11	2740 x 140 x 130	107 7/8" x 5 1/2" x 5 1/8"	14.00	30.86	12.908	3.934	34.464	379.108
A12	U460011A1201F	110	4 5/16"	4000	157 1/2"	10	4050 x 140 x 130	159 1/2" x 5 1/2" x 5 1/8"	19.00	41.89	12.237	3.730	48.948	489.480
A12	U460012A121RF	120	4 3/4"	2670	105 1/8"	10	2740 x 140 x 130	107 7/8" x 5 1/2" x 5 1/8"	14.00	30.86	11.923	3.634	31.834	318.344
A12	U460012A1201F	120	4 3/4"	4000	157 1/2"	10	4050 x 140 x 130	159 1/2" x 5 1/2" x 5 1/8"	20.50	45.19	11.351	3.460	45.404	454.040
A12	U460015A121RF	150	5 7/8"	2670	105 1/8"	9	2740 x 160 x 120	107 7/8" x 6 1/4" x 4 3/4"	15.00	33.07	13.457	4.102	35.930	323.372
A12	U460015A1201F	150	5 7/8"	4000	157 1/2"	9	4050 x 160 x 120	159 1/2" x 6 1/4" x 4 3/4"	22.50	49.60	12.807	3.904	51.228	461.052
											AVAILABLE FROM ITALY MSRP PRICING USD			
A12	R460017A1201F	170	6 11/16"	4000	157 1/2"		<<<<< MINIMUM ORDER AND PACKAGING TO BE CONFIRMED >>>>>				16.667	5.080	66.668	
A12	R460018A1201F	180	7 1/16"	4000	157 1/2"		<<<<< MINIMUM ORDER AND PACKAGING TO BE CONFIRMED >>>>>				18.065	5.506	72.260	
706	U46001070601R	100	3 15/16"	2670	105 1/8"	10	2740 x 145 x 110	107 7/8" x 5 3/4" x 4 3/8"	11.50	25.35	8.490	2.588	22.668	226.683
706	U46001070601	100	3 15/16"	4000	157 1/2"	10	4050 x 145 x 110	159 1/2" x 5 3/4" x 4 3/8"	18.00	39.68	8.357	2.547	33.428	334.280
706	U46001570601R	150	5 7/8"	2670	105 1/8"	9	2740 x 160 x 120	107 7/8" x 6 1/4" x 4 3/4"	15.00	33.07	9.026	2.751	24.099	216.895
706	U46001570601	150	5 7/8"	4000	157 1/2"	9	4050 x 160 x 120	159 1/2" x 6 1/4" x 4 3/4"	22.50	49.60	9.207	2.806	36.828	331.452
											AVAILABLE FROM ITALY MSRP PRICING USD			
A13	R460010A1301F	100	3 15/16"	4000	157 1/2"		<<<<< MINIMUM ORDER AND PACKAGING TO BE CONFIRMED >>>>>				9.478	2.889	37.912	
A13	R460015A1301F	150	5 7/8"	4000	157 1/2"		<<<<< MINIMUM ORDER AND PACKAGING TO BE CONFIRMED >>>>>				10.501	3.201	42.004	
A19	R460010A1901F	100	3 15/16"	4000	157 1/2"		<<<<< MINIMUM ORDER AND PACKAGING TO BE CONFIRMED >>>>>				9.222	2.811	36.888	
A19	R460015A1901F	150	5 7/8"	4000	157 1/2"		<<<<< MINIMUM ORDER AND PACKAGING TO BE CONFIRMED >>>>>				11.852	3.612	47.408	
A20	R460010A2001F	100	3 15/16"	4000	157 1/2"		<<<<< MINIMUM ORDER AND PACKAGING TO BE CONFIRMED >>>>>				9.481	2.890	37.924	
A20	R460015A2001F	150	5 7/8"	4000	157 1/2"		<<<<< MINIMUM ORDER AND PACKAGING TO BE CONFIRMED >>>>>				11.623	3.543	46.492	

426

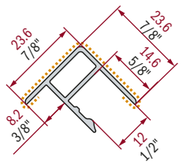

TOE KICK AND ACCESSORIES

90° FOILED PVC CORNER FOR TOE KICK
A11 Aluminum Foil Clear
A12 Aluminum Foil Stainless
A13 Aluminum Foil Chrome
A19 Aluminum Foil Copper
A20 Aluminum Foil Gold
706 Black Matt (without Protective Film)
Other Colors and Sizes Available FROM ITALY

COUP DE PIED ET ACCESSOIRES

COIN 90° EN PVC RECOUVERT POUR COUP DE PIED
A11 Feuille Aluminium Clair
A12 Feuille Aluminium Inox
A13 Feuille Aluminium Chrome
A19 Feuille Aluminium Cuivre
A20 Feuille Aluminium Or
706 Noir Mat (sans Pellicule Protectrice)
Autres Couleurs et Dimensions Disponibles DE L'ITALIE

ZOCALO Y ACCESORIOS

ANGULO 90ºPVC REVESTIDO FOLIO DE ALUMINIO PARA ZOCALO
A11 Folio de Aluminio Claro
A12 Folio de Aluminio Inox
A13 Folio de Aluminio Cromado
A19 Folio de Aluminio Cobre
A20 Folio de Aluminio Oro
706 Negro Mate (sin Película Protectora)
Otras Dimensiones Disponibles DE ITALIA

COLORS	ITEM NUMBER	HEIGHT		PCS PER BOX	BOX DIMENSION		BOX WEIGHT		STOCK IN AMERICA MSRP PRICING USD	
					mm	inch				
		mm	inch		W x D x H	W x D x H	KG	LB	EACH	BOX
A11	U426A-97A11SF	100	3 15/16"	30	215 x 160 x 130	8 1/2" x 6 1/4" x 5 1/8"	0.60	1.32	2.231	66.930
A11	U426A107A11SF	110	4 5/16"	30	215 x 160 x 130	8 1/2" x 6 1/4" x 5 1/8"	0.65	1.43	2.312	69.360
A11	U426A117A11SF	120	4 3/4"	30	225 x 160 x 130	8 7/8" x 6 1/4" x 5 1/8"	0.70	1.54	2.458	73.740
A11	U426A147A11SF	150	5 7/8"	30	215 x 160 x 130	8 1/2" x 6 1/4" x 5 1/8"	0.85	1.87	2.796	83.880
									AVAILABLE FROM ITALY MSRP PRICING USD	
A11	426A-167A11SF	170	6 11/16"		<<<<< MINIMUM ORDER AND PACKAGING TO BE CONFIRMED >>>>>				2.244	
A11	426A-177A11SF	180	7 1/16"		<<<<< MINIMUM ORDER AND PACKAGING TO BE CONFIRMED >>>>>				2.393	
A12	U426A-97A12SF	100	3 15/16"	30	215 x 160 x 130	8 1/2" x 6 1/4" x 5 1/8"	0.60	1.32	2.349	70.470
A12	U426A107A12SF	110	4 5/16"	30	215 x 160 x 130	8 1/2" x 6 1/4" x 5 1/8"	0.65	1.43	2.441	73.230
A12	U426A117A12SF	120	4 3/4"	30	215 x 160 x 130	8 1/2" x 6 1/4" x 5 1/8"	0.70	1.54	2.602	78.060
A12	U426A147A12SF	150	5 7/8"	30	215 x 160 x 130	8 1/2" x 6 1/4" x 5 1/8"	0.85	1.87	2.977	89.310
									AVAILABLE FROM ITALY MSRP PRICING USD	
A12	426A-167A12SF	170	6 11/16"		<<<<< MINIMUM ORDER AND PACKAGING TO BE CONFIRMED >>>>>				2.195	
A12	426A-177A12SF	180	7 1/16"		<<<<< MINIMUM ORDER AND PACKAGING TO BE CONFIRMED >>>>>				2.344	
706	U426A-97706SF	100	3 15/16"	30	215 x 160 x 130	8 1/2" x 6 1/4" x 5 1/8"	0.60	1.32	2.130	63.900
706	U426A147706SF	150	5 7/8"	30	215 x 160 x 130	8 1/2" x 6 1/4" x 5 1/8"	0.85	1.87	2.660	79.800
									AVAILABLE FROM ITALY MSRP PRICING USD	
A13	426A-97-A13SF	100	3 15/16"		<<<<< MINIMUM ORDER AND PACKAGING TO BE CONFIRMED >>>>>				1.593	
A13	426A-147A13SF	150	5 7/8"		<<<<< MINIMUM ORDER AND PACKAGING TO BE CONFIRMED >>>>>				2.148	
A19	426A-97-A19SF	100	3 15/16"		<<<<< MINIMUM ORDER AND PACKAGING TO BE CONFIRMED >>>>>				1.608	
A19	426A-147A19SF	150	5 7/8"		<<<<< MINIMUM ORDER AND PACKAGING TO BE CONFIRMED >>>>>				2.170	
A20	426A-97-A20SF	100	3 15/16"		<<<<< MINIMUM ORDER AND PACKAGING TO BE CONFIRMED >>>>>				1.595	
A20	426A-147A20SF	150	5 7/8"		<<<<< MINIMUM ORDER AND PACKAGING TO BE CONFIRMED >>>>>				2.152	

1357

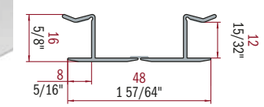

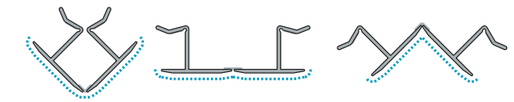

TOE KICK AND ACCESSORIES

VARIABLE FOILED PVC CORNER FOR TOE KICK
A11 Aluminum Foil Clear
A12 Aluminum Foil Stainless
A13 Aluminum Foil Chrome
A19 Aluminum Foil Copper
A20 Aluminum Foil Gold
706 Black Matt (without Protective Film)
Other Colors and Sizes Available FROM ITALY

COUP DE PIED ET ACCESSOIRES

COIN VARIABLE EN PVC RECOUVERT POUR COUP DE PIED
A11 Feuille Aluminium Clair
A12 Feuille Aluminium Inox
A13 Feuille Aluminium Chrome
A19 Feuille Aluminium Cuivre
A20 Feuille Aluminium Or
706 Noir Mat (sans Pellicule Protectrice)
Autres Couleurs et Dimensions Disponibles DE L'ITALIE

ZOCALO Y ACCESORIOS

ANGULO VARIABLE EN PVC REVESTIDO PARA ZOCALO
A11 Folio de Aluminio Claro
A12 Folio de Aluminio Inox
A13 Folio de Aluminio Cromado
A19 Folio de Aluminio Cobre
A20 Folio de Aluminio Oro
706 Negro Mate (sin Película Protectora)
Otras Dimensiones Disponibles DE ITALIA

COLORS	ITEM NUMBER	HEIGHT		PCS PER BOX	BOX DIMENSION		BOX WEIGHT		STOCK IN AMERICA MSRP PRICING USD	
					mm	inch				
		mm	inch		W x D x H	W x D x H	KG	LB	EACH	BOX
A11	U1357-97A11SF	100	3 15/16"	30	220 x 165 x 140	8 5/8" x 6 1/2" x 5 1/2"	1.00	2.20	4.408	132.240
A11	U1357107A11SF	110	4 5/16"	30	220 x 165 x 140	8 5/8" x 6 1/2" x 5 1/2"	1.00	2.20	4.584	137.520
A11	U1357117A11SF	120	4 3/4"	30	220 x 165 x 140	8 5/8" x 6 1/2" x 5 1/2"	1.20	2.65	4.745	142.350
A11	U1357147A11SF	150	5 7/8"	30	220 x 165 x 140	8 5/8" x 6 1/2" x 5 1/2"	1.50	3.31	5.436	163.080
									AVAILABLE FROM ITALY MSRP PRICING USD	
A11	1357-167A11SF	170	6 11/16"		<<<<< MINIMUM ORDER AND PACKAGING TO BE CONFIRMED >>>>>				3.562	
A11	1357-177A11SF	180	7 1/16"		<<<<< MINIMUM ORDER AND PACKAGING TO BE CONFIRMED >>>>>				2.931	
A12	U1357-97A12SF	100	3 15/16"	30	220 x 165 x 140	8 5/8" x 6 1/2" x 5 1/2"	1.00	2.20	4.539	136.170
A12	U1357107A12SF	110	4 5/16"	30	220 x 165 x 140	8 5/8" x 6 1/2" x 5 1/2"	1.00	2.20	4.730	141.900
A12	U1357117A12SF	120	4 3/4"	30	220 x 165 x 140	8 5/8" x 6 1/2" x 5 1/2"	1.20	2.65	4.664	139.920
A12	U1357147A12SF	150	5 7/8"	30	220 x 165 x 140	8 5/8" x 6 1/2" x 5 1/2"	1.50	3.31	5.377	161.310
									AVAILABLE FROM ITALY MSRP PRICING USD	
A12	1357-167A12SF	180	7 1/16"		<<<<< MINIMUM ORDER AND PACKAGING TO BE CONFIRMED >>>>>				3.624	
A12	1357-177A12SF	170	6 11/16"		<<<<< MINIMUM ORDER AND PACKAGING TO BE CONFIRMED >>>>>				3.112	
706	U1357-97706SF	100	3 15/16"	30	220 x 165 x 140	8 5/8" x 6 1/2" x 5 1/2"	1.00	2.20	5.025	150.750
706	U1357147706SF	150	5 7/8"	30	220 x 165 x 140	8 5/8" x 6 1/2" x 5 1/2"	1.50	3.31	5.965	178.950
									AVAILABLE FROM ITALY MSRP PRICING USD	
A13	1357-97-A13SF	100	3 15/16"		<<<<< MINIMUM ORDER AND PACKAGING TO BE CONFIRMED >>>>>				2.347	
A13	1357-147A13SF	150	5 7/8"		<<<<< MINIMUM ORDER AND PACKAGING TO BE CONFIRMED >>>>>				3.155	
A19	1357-97-A19SF	100	3 15/16"		<<<<< MINIMUM ORDER AND PACKAGING TO BE CONFIRMED >>>>>				2.366	
A19	1357-147A19SF	150	5 7/8"		<<<<< MINIMUM ORDER AND PACKAGING TO BE CONFIRMED >>>>>				3.183	
A20	1357-97-A20SF	100	3 15/16"		<<<<< MINIMUM ORDER AND PACKAGING TO BE CONFIRMED >>>>>				2.351	
A20	1357-147A20SF	150	5 7/8"		<<<<< MINIMUM ORDER AND PACKAGING TO BE CONFIRMED >>>>>				3.161	

4072

TOE KICK AND ACCESSORIES

PLAIN ALUMINUM TOE KICK
50S Aluminum Clear Anodize
LU5 Aluminum Chrome Anodize
Other Colors and Sizes Available FROM ITALY

COUP DE PIED ET ACCESSOIRES

COUP DE PIED EN ALUMINIUM LISSE
50S Aluminium Clair Anodisé
LU5 Aluminium Chrome Anodisé
Autres Couleurs et Dimensions Disponibles DE L'ITALIE

ZOCALO Y ACCESORIOS

ZOCALO DE ALUMINIO MACIZO
50S Aluminio Anodizado Claro
LU5 Aluminio Anodizado Chrome
Otras Colores y Dimensiones Disponibles DE ITALIA

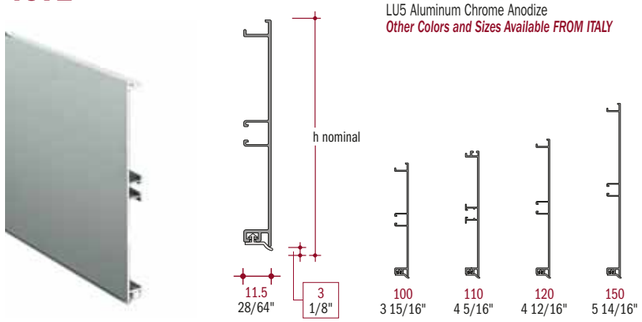

COLORS	ITEM NUMBER	HEIGHT		LENGTH		PCS PER BOX	BOX DIMENSION		BOX WEIGHT		STOCK IN AMERICA MSRP PRICING USD			
							mm	inch						
		mm	inch	mm	inch		W x D x H	W x D x H	KG	LB	METER	FOOT	EACH	BOX
50S	U4072G50S1RFA	100	3 15/16"	2670	105 1/8"	10	2740 x 120 x 90	107 7/8" x 4 3/4" x 3 1/2"	13.50	29.76	21.153	6.447	56.479	564.785
50S	U4072G50S1UFA	100	3 15/16"	4100	161 7/16"	10	4250 x 120 x 90	167 3/8" x 4 3/4" x 3 1/2"	20.50	45.19	19.330	5.892	79.253	792.530
50S	U4070I50S01RF	110	4 5/16"	2670	105 1/8"	10	2740 x 140 x 90	107 7/8" x 5 1/2" x 3 1/2"	17.00	37.48	29.741	9.065	79.408	794.085
50S	U4070I50S01UF	110	4 5/16"	4100	161 7/16"	10	4250 x 140 x 90	167 3/8" x 5 1/2" x 3 1/2"	26.00	57.32	27.266	8.311	111.791	1117.906
50S	U4072M50S1RFA	120	4 3/4"	2670	105 1/8"	10	2740 x 140 x 90	107 7/8" x 5 1/2" x 3 1/2"	15.00	33.07	23.158	7.059	61.832	618.319
50S	U4072M50S1UFA	120	4 3/4"	4100	161 7/16"	10	4250 x 140 x 90	167 3/8" x 5 1/2" x 3 1/2"	23.00	50.71	21.442	6.536	87.912	879.122
50S	U4072Q50S1RFA	150	5 7/8"	2670	105 1/8"	10	2740 x 170 x 90	107 7/8" x 6 3/4" x 3 1/2"	22.50	49.60	28.825	8.786	76.963	769.628
50S	U4072Q50S1UFA	150	5 7/8"	4100	161 7/16"	10	4250 x 170 x 90	167 3/8" x 6 3/4" x 3 1/2"	34.50	76.06	25.591	7.800	104.923	1049.231
											AVAILABLE FROM ITALY MSRP PRICING USD			
LU5	ITR4072GLU501UF	100	3 15/16"	4100	161 7/16"		<<<<< MINIMUM ORDER AND PACKAGING TO BE CONFIRMED >>>>>				25.470	7.763	104.427	
LU5	ITR4072QLU501UF	150	5 7/8"	4100	161 7/16"		<<<<< MINIMUM ORDER AND PACKAGING TO BE CONFIRMED >>>>>				34.515	10.520	141.512	

1353

TOE KICK AND ACCESSORIES

90° ALUMINUM CORNER FOR TOE KICK
50S Aluminum Clear Anodize
LU5 Aluminum Chrome Anodize
Other Colors and Sizes Available FROM ITALY

COUP DE PIED ET ACCESSOIRES

COIN 90° EN ALUMINIUM POUR COUP DE PIED
50S Aluminium Clair Anodisé
LU5 Aluminium Chrome Anodisé
Autres Couleurs et Dimensions Disponibles DE L'ITALIE

ZOCALO Y ACCESORIOS

ANGULO 90 ° EN ALUMINIO PARA ZOCALO
50S Aluminio Anodizado Claro
LU5 Aluminio Anodizado Chrome
Otras Terminaciones y Dimensiones Disponibles DE ITALIA

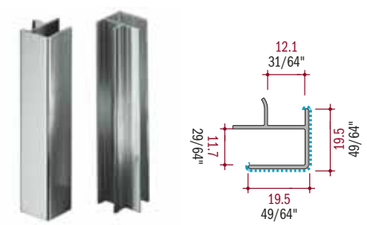

COLORS	ITEM NUMBER	HEIGHT		PCS PER BOX	BOX DIMENSION		BOX WEIGHT		STOCK IN AMERICA MSRP PRICING USD	
					mm	inch				
		mm	inch		W x D x H	W x D x H	KG	LB	EACH	BOX
50S	U135350S/SF01	100	3 15/16"	20	220 x 165 x 140	8 5/8" x 6 1/2" x 5 1/2"	0.50	1.10	2.476	49.520
50S	U135350S/SF02	110	4 5/16"	20	220 x 165 x 140	8 5/8" x 6 1/2" x 5 1/2"	0.50	1.10	2.884	57.680
50S	U135350S/SF03	120	4 3/4"	20	220 x 165 x 140	8 5/8" x 6 1/2" x 5 1/2"	0.60	1.32	2.743	54.860
50S	U135350S/SF06	150	5 7/8"	20	220 x 165 x 140	8 5/8" x 6 1/2" x 5 1/2"	0.70	1.54	2.983	59.660
									AVAILABLE FROM ITALY MSRP PRICING USD	
LU5	1353LU5/SF01	100	3 15/16"		<<<<< MINIMUM ORDER AND PACKAGING TO BE CONFIRMED >>>>>				2.314	
LU5	1353LU5/SF06	150	5 7/8"		<<<<< MINIMUM ORDER AND PACKAGING TO BE CONFIRMED >>>>>				3.023	

1354

TOE KICK AND ACCESSORIES

VARIABLE ALUMINUM CORNER FOR TOE KICK
50S Aluminum Clear Anodize
LU5 Aluminum Chrome Anodize
Other Colors and Sizes Available FROM ITALY

COUP DE PIED ET ACCESSOIRES

COIN VARIABLE EN ALUMINIUM POUR COUP DE PIED
50S Aluminium Clair Anodisé
LU5 Aluminium Chrome Anodisé
Autres Couleurs et Dimensions Disponibles DE L'ITALIE

ZOCALO Y ACCESORIOS

ANGULO VARIABLE EN ALUMINIO PARA ZOCALO
50S Aluminio Anodizado Claro
LU5 Aluminio Anodizado Chrome
Otros Colores y Dimensiones Disponibles DE ITALIA

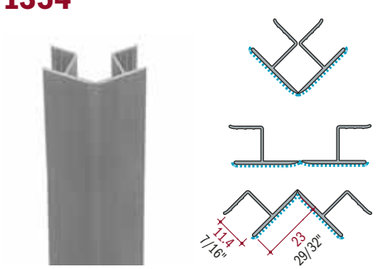

COLORS	ITEM NUMBER	HEIGHT		PCS PER BOX	BOX DIMENSION		BOX WEIGHT		STOCK IN AMERICA MSRP PRICING USD	
					mm	inch				
		mm	inch		W x D x H	W x D x H	KG	LB	EACH	BOX
50S	U135410050SSF	100	3 15/16"	30	220 x 165 x 140	8 5/8" x 6 1/2" x 5 1/2"	0.50	1.10	4.168	125.040
50S	U135411050SSF	110	4 5/16"	30	220 x 165 x 140	8 5/8" x 6 1/2" x 5 1/2"	0.60	1.32	4.939	148.170
50S	U135412050SSF	120	4 3/4"	30	220 x 165 x 140	8 5/8" x 6 1/2" x 5 1/2"	0.60	1.32	5.032	150.960
50S	U135415050SSF	150	5 7/8"	30	220 x 165 x 140	8 5/8" x 6 1/2" x 5 1/2"	0.70	1.54	5.482	164.460
									AVAILABLE FROM ITALY MSRP PRICING USD	
LU5	1354-100LU5SF	100	3 15/16"		<<<<< MINIMUM ORDER AND PACKAGING TO BE CONFIRMED >>>>>				4.195	
LU5	1354-150LU5SF	150	5 7/8"		<<<<< MINIMUM ORDER AND PACKAGING TO BE CONFIRMED >>>>>				5.820	

THE DIFFERENCE IN THE KITCHEN

“GOLA” PROFILES

Why...
It offers a practical way to design a "European handle free" kitchen

- Innovative design
- Easier to clean
- Safety feature: no handles exceeding the doors
- Lower cost than traditional handles

Pourquoi...
Il offre un moyen pratique de concevoir une cuisine "Européenne sans poignée"

- *Conception innovatrice*
- *Plus facile à nettoyer*
- *Caractéristique sécurité: aucune poignée dépassant les portes*
- *Coûts inférieur aux poignées traditionnel*

Por qué...
Oferece un método practico para diseñar una cocina a la Europea sin manijas o agarraderas.

- Diseño innovador
- Más fácil de limpiar
- Elemento de seguridad: no existen manijas que sobresalgan de las puertas
- Cuesta menos que las manijas tradicionales

NEW QUICK-FIXING SUPPORT GOLA PROFILE

1 DOWELED SUPPORT

2 PUSH SUPPORT IN

3 ADD "GOLA" PROFILE

4 ADD FIXING CLIP

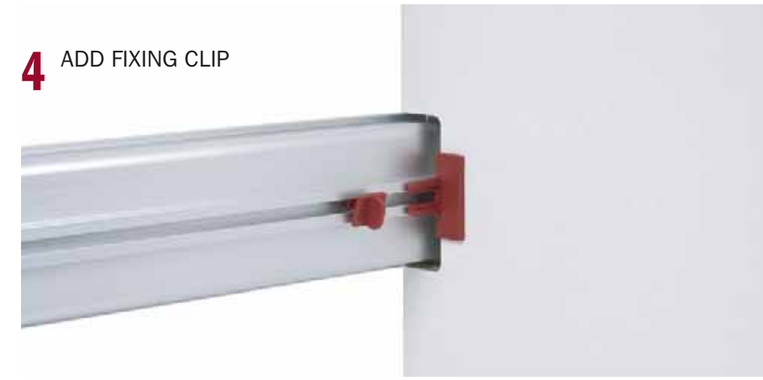

5 TURN CLIP

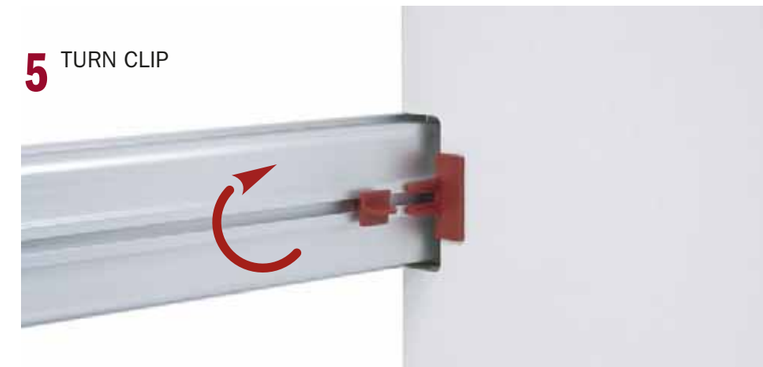

6 PUSH AND LOCK

8006

Horizontal L shape "GOLA" PROFILES for application under the countertop

Technical Specifications...
- Material: Aluminum
- Performance: Aluminum extrusion with high quality anodized finishes
- Environment: 100% recyclable materials

Spécifications Techniques...
- *Matériel: Aluminium*
- *Performance: Extrusion d'aluminium avec finitions anodisées de haute qualité*
- *Environnement: Matériaux 100% recyclables*

Especificaciones Técnicas...
- Material: Aluminio
- Rendimiento: Extrusión de aluminio con acabados anodizado de alta calidad
- Medio Ambiente: Materiales 100% reciclables

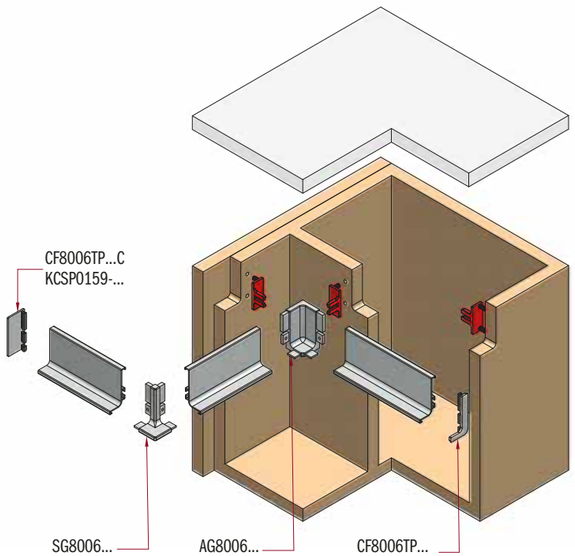

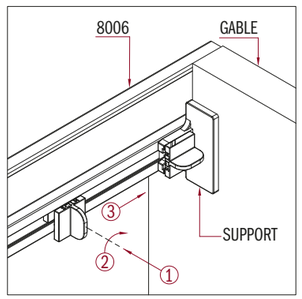

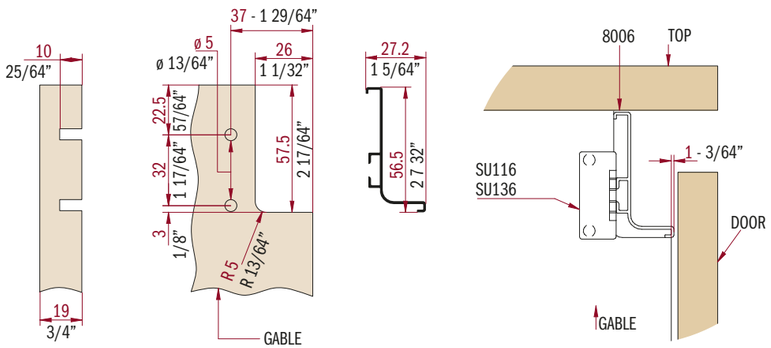

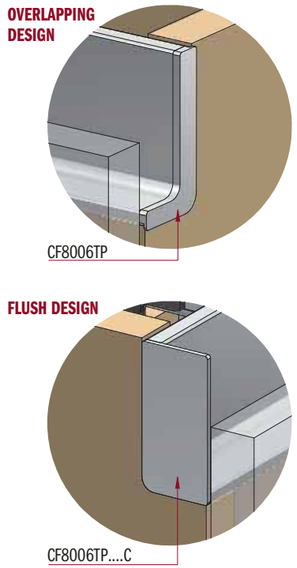

8007

Horizontal C shape "GOLA" PROFILES for application inbetween the drawers

Technical Specifications...
- Material: Aluminum
- Performance: Aluminum extrusion with high quality anodized finishes
- Environment: 100% recyclable materials

Spécifications Techniques...
- *Matériel: Aluminium*
- *Performance: Extrusion d'aluminium avec finitions anodisées de haute qualité*
- *Environnement: Matériaux 100% recyclables*

Especificaciones Técnicas...
- Material: Aluminio
- Rendimiento: Extrusión de aluminio con acabados anodizado de alta calidad
- Medio Ambiente: Materiales 100% reciclables

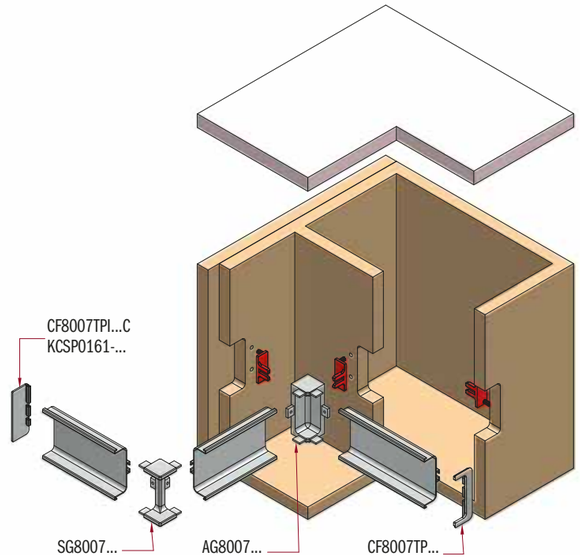

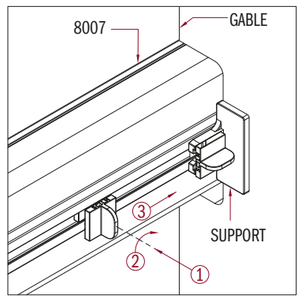

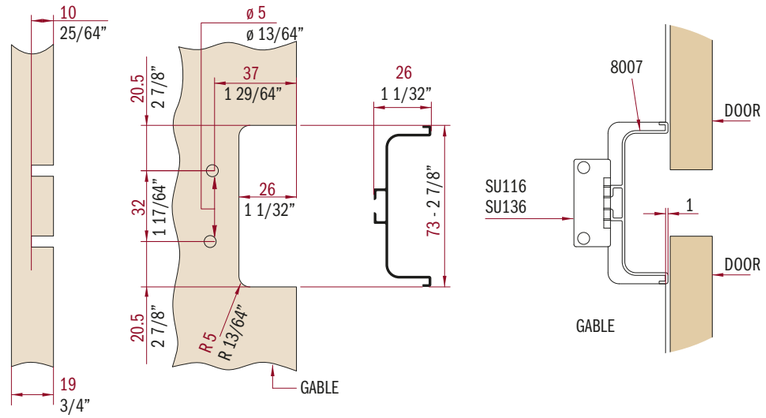

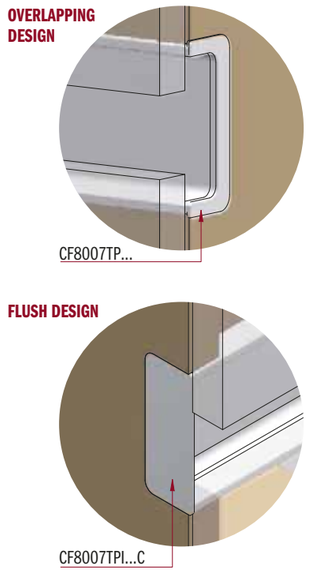

How to calculate the door's dimensions

regular box

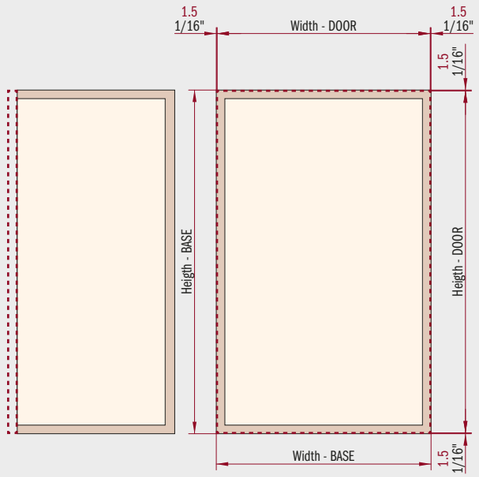

DOOR CALCULATION :
H door = Heigth base - 3mm , H door = Heigth base - 1/8"
W door = Width base - 3mm , W door = Width base - 1/8"

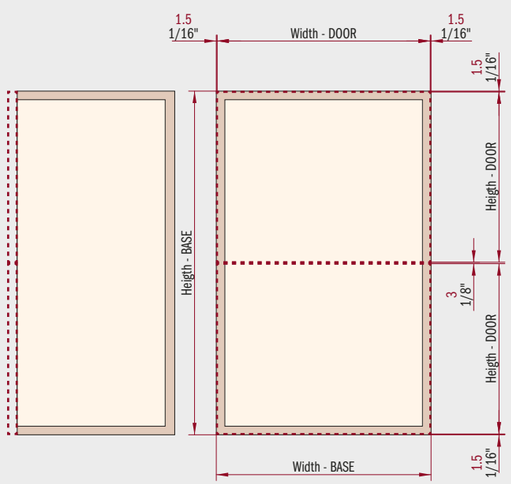

DOOR CALCULATION :
H door = (Heigth base - 6mm) / 2 , H door = (Heigth base - 5/64") / 2
W door = Width base - 3mm , W door = Width base - 1/8"

box with "GOLA PROFILE"

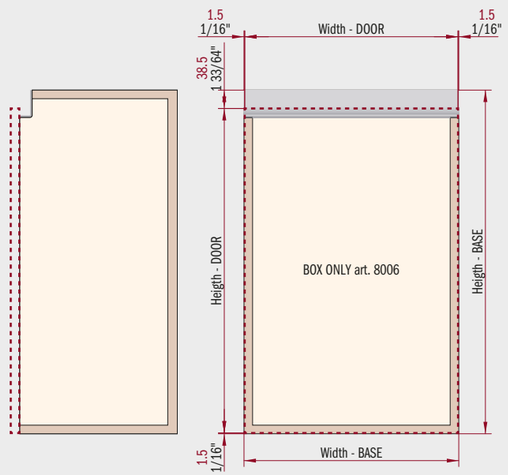

DOOR CALCULATION :
H door = Heigth base - 40mm , H door = Heigth base - 1 37/64"
W door = Width base - 3mm , W door = Width base - 1/8"

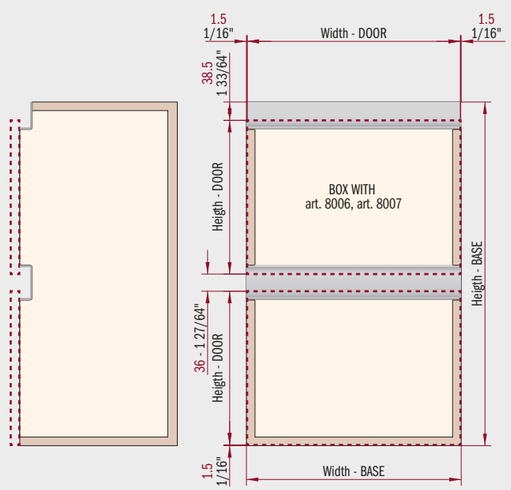

DOOR CALCULATION :
H door = (Heigth base - 76mm) / 2 , H door = (Heigth base - 2 63/64") / 2
W door = Width base - 3mm , W door = Width base - 1/8"

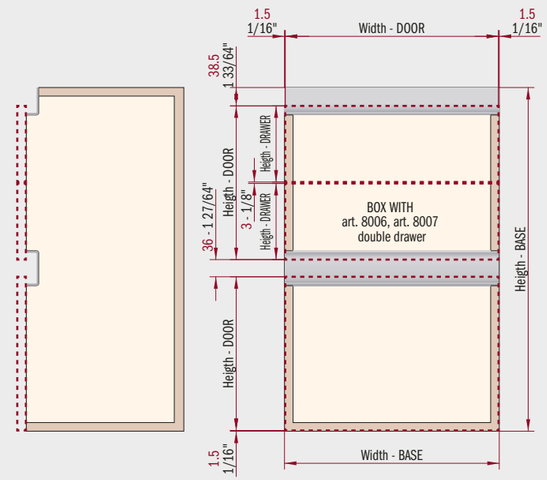

DOOR and DRAWER CALCULATION :
H door = (Heigth base - 76mm) / 2 , H door = (Heigth base - 2 63/64") / 2
H drawer = (H door - 3) / 2 , H drawer = (H door - 1/8") / 2
W door/drawer = Width base - 3mm , W door/drawer = Width base - 1/8"

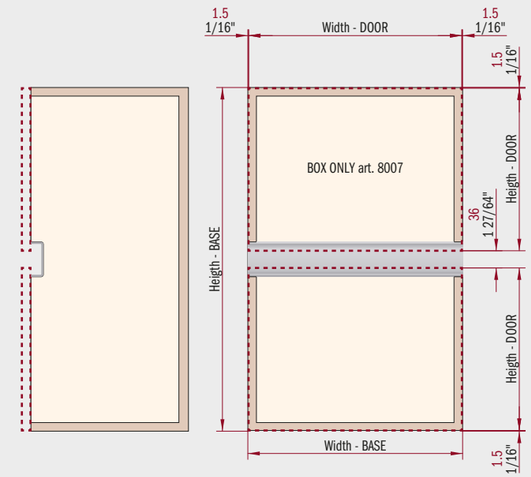

DOOR CALCULATION :
H door = (Heigth base - 39mm) / 2 , H door = (Heigth base - 1 17/32") / 2
W door = Width base - 3mm , W door = Width base - 1 /8"

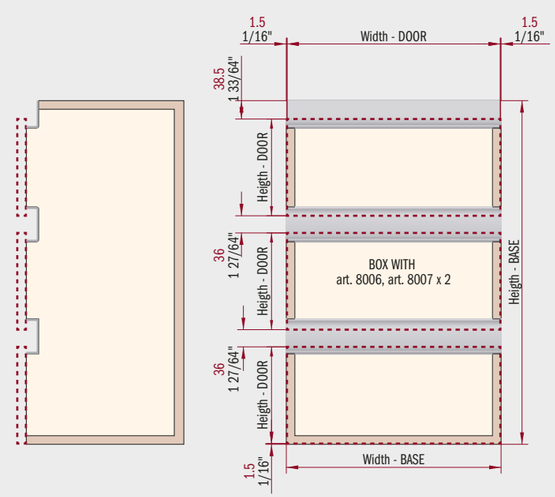

DOOR CALCULATION :
H door = (Heigth base - 112mm) / 3 , H door = (Heigth base - 4 13/32") / 3
W door = Width base - 3mm , W door = Width base - 1/8"

8006

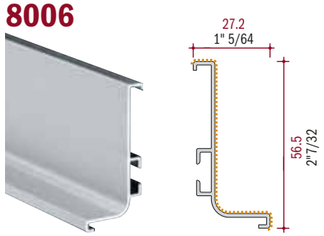

"GOLA" PROFILES

"GOLA" HORIZONTAL ALUMINUM SPACER CHANNEL PROFILE FOR BASE CABINET
50S Aluminum Clear Anodize
S2I Aluminum Titanium Anodize
SB1 Aluminum Stainless Anodize
V01 Aluminum White Semi-Gloss Powder Coated
V12 Aluminum Black Matt Powder Coated
LU5 Aluminum Chrome Anodize
S2R Aluminum Copper Anodize
S2Q Aluminum Gold Anodize
Other Colors and Lengths Available FROM ITALY

PROFILÉ "GOLA"

"GOLA" PROFILÉ D'ESPACEMENT HORIZONTALE EN ALUMINIUM POUR ARMOIRE DU BAS
50S Aluminium Clair Anodisé
S2I Aluminium Titanium Anodisé
SB1 Aluminium Inox Anodisé
V01 Aluminium Blanc Semi-Lustre Peint à Poudre
V12 Aluminium Noir Mat Peint à Poudre
LU5 Aluminium Chrome Anodisé
S2R Aluminium Cuivre Anodisé
S2Q Aluminium Or Anodisé
Autres Couleurs et Longueurs Disponibles DE L'ITALIE

PERFIL "GOLA"

PERFIL GOLA HORIZONTAL EN ALUMINIO PARA MUEBLE BAJO
50S Aluminio Anodizado Claro
S2I Aluminio Anodizado Titanio
SB1 Aluminio Anodizado Inox
V01 Aluminio Blanco Semi-Brillo Barnizado
V12 Aluminio Negro Mate Barnizado
LU5 Aluminio Anodizado Cromo
S2R Aluminio Anodizado Cobre
S2Q Aluminio Anodizado Oro
Otros Colores y Dimensiones DE ITALIA

COLORS	ITEM NUMBER	LENGTH mm	LENGTH inch	PCS PER BOX	BOX DIMENSION mm W x D x H	BOX DIMENSION inch W x D x H	BOX WEIGHT KG	BOX WEIGHT LB	STOCK IN AMERICA MSRP PRICING USD METER	FOOT	EACH	BOX
50S	U800650SL27	2670	105 1/8"	10	2740 x 145 x 44	107 7/8" x 5 3/4" x 1 3/4"	9.50	20.94	19.280	5.877	51.478	514.776
50S	U800650SL41	4100	161 7/16"	10	4250 x 145 x 44	167 3/8" x 5 3/4" x 1 3/4"	15.50	34.17	18.462	5.627	75.694	756.942
S2I	U8006S2IL27	2670	105 1/8"	10	2740 x 145 x 44	107 7/8" x 5 3/4" x 1 3/4"	9.50	20.94	27.446	8.366	73.281	732.808
S2I	U8006S2IL41	4100	161 7/16"	10	4250 x 145 x 44	167 3/8" x 5 3/4" x 1 3/4"	15.50	34.17	25.908	7.897	106.223	1062.228
SB1	U8006SB1L27	2670	105 1/8"	10	2740 x 145 x 44	107 7/8" x 5 3/4" x 1 3/4"	9.50	20.94	28.617	8.722	76.407	764.074
SB1	U8006SB1L41	4100	161 7/16"	10	4250 x 145 x 44	167 3/8" x 5 3/4" x 1 3/4"	15.50	34.17	28.043	8.548	114.976	1149.763
V01	U8006V01L27	2670	105 1/8"	10	2740 x 145 x 44	107 7/8" x 5 3/4" x 1 3/4"	9.50	20.94	18.285	5.573	48.821	488.210
V01	U8006V01L41	4100	161 7/16"	10	4250 x 145 x 44	167 3/8" x 5 3/4" x 1 3/4"	15.50	34.17	17.702	5.396	72.578	725.782
V12	U8006V12L27	2670	105 1/8"	10	2740 x 145 x 44	107 7/8" x 5 3/4" x 1 3/4"	9.50	20.94	19.857	6.052	53.018	530.182
V12	U8006V12L41	4100	161 7/16"	10	4250 x 145 x 44	167 3/8" x 5 3/4" x 1 3/4"	15.50	34.17	18.791	5.727	77.043	770.431
									AVAILABLE FROM ITALY MSRP PRICING USD			
LU5	8006LU5L41	4100	161 7/16"	<<<<< MINIMUM ORDER AND PACKAGING TO BE CONFIRMED >>>>>					19.221	5.859	78.806	
S2R	8006S2RL41	4100	161 7/16"	<<<<< MINIMUM ORDER AND PACKAGING TO BE CONFIRMED >>>>>					25.284	7.707	103.664	
S2Q	8006S2QL41	4100	161 7/16"	<<<<< MINIMUM ORDER AND PACKAGING TO BE CONFIRMED >>>>>					22.767	6.939	93.345	

GG8006

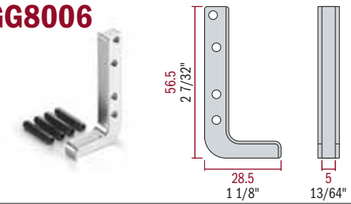

ALUMINUM LINEAR JUNCTION FOR GOLA 8006
50S Aluminum Clear Anodize
S2I Aluminum Titanium Anodize
SB1 Aluminum Stainless Anodize
V01 Aluminum White Semi-Gloss Powder Coated
V12 Aluminum Black Matt Powder Coated
LU5 Aluminum Chrome Anodize
S2R Aluminum Copper Anodize
S2Q Aluminum Gold Anodize
Other Colors Available FROM ITALY

JONCTION LINÉAIRE EN ALUMINIUM POUR GOLA 8006
50S Aluminium Clair Anodisé
S2I Aluminium Titanium Anodisé
SB1 Aluminium Inox Anodisé
V01 Aluminium Blanc Semi-Lustre Peint à Poudre
V12 Aluminium Noir Mat Peint à Poudre
LU5 Aluminium Chrome Anodisé
S2R Aluminium Cuivre Anodisé
S2Q Aluminium Or Anodisé
Autres Couleurs Disponibles DE L'ITALIE

UNIÓN LINEAL EN ALUMINIO PARA GOLA 8006
50S Aluminio Anodizado Claro
S2I Aluminio Anodizado Titanio
SB1 Aluminio Anodizado Inox
V01 Aluminio Blanco Semi-Brillo Barnizado
V12 Aluminio Negro Mate Barnizado
LU5 Aluminio Anodizado Cromo
S2R Aluminio Anodizado Cobre
S2Q Aluminio Anodizado Oro
Otros Colores Disponibles DE ITALIA

COLORS	ITEM NUMBER	PCS PER BOX	BOX DIMENSION mm W x D x H	BOX DIMENSION inch W x D x H	BOX WEIGHT KG	BOX WEIGHT LB	STOCK IN AMERICA MSRP PRICING USD METER	FOOT	EACH	BOX
50S	UGG800601-50S	10	150 x 100 x 90	5 7/8" x 3 7/8" x 3 1/2"	0.25	0.55			28.434	284.340
S2I	UGG800601-S2I	10	150 x 100 x 90	5 7/8" x 3 7/8" x 3 1/2"	0.25	0.55			32.478	324.780
SB1	UGG800601-SB1	10	150 x 100 x 90	5 7/8" x 3 7/8" x 3 1/2"	0.25	0.55			35.582	355.820
V01	UGG800601-V01	10	150 x 100 x 90	5 7/8" x 3 7/8" x 3 1/2"	0.25	0.55			26.542	265.420
V12	UGG800601-V12	10	150 x 100 x 90	5 7/8" x 3 7/8" x 3 1/2"	0.25	0.55			26.436	264.360
							AVAILABLE FROM ITALY MSRP PRICING USD			
LU5	GG800601-LU5	<<<<< MINIMUM ORDER AND PACKAGING TO BE CONFIRMED >>>>>							28.005	
S2R	GG800601-S2R	<<<<< MINIMUM ORDER AND PACKAGING TO BE CONFIRMED >>>>>							37.013	
S2Q	GG800601-S2Q	<<<<< MINIMUM ORDER AND PACKAGING TO BE CONFIRMED >>>>>							37.002	

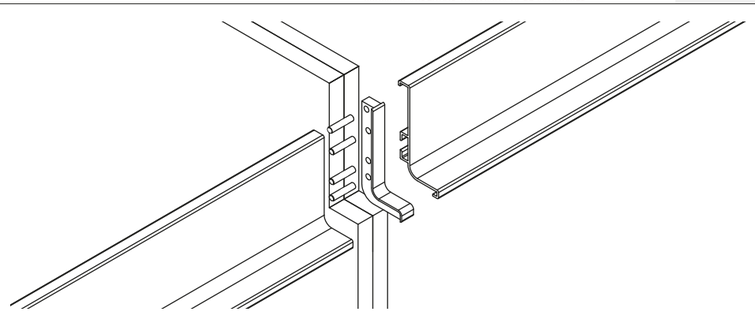

AG8006

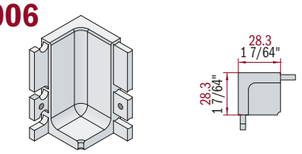

"GOLA" PROFILES

90° INTERNAL ALUMINUM CORNER FOR "GOLA" PROFILES 8006
50S Aluminum Clear Anodize
S2I Aluminum Titanium Anodize
SB1 Aluminum Stainless Anodize
V01 Aluminum White Semi-Gloss Powder Coated
V12 Aluminum Black Matt Powder Coated
LU5 Aluminum Chrome Anodize
S2R Aluminum Copper Anodize
S2Q Aluminum Gold Anodize
Other Colors Available FROM ITALY

PROFILÉ "GOLA"

COIN INTERNE 90° EN ALUMINIUM POUR PROFILÉ "GOLA" 8006
50S Aluminium Clair Anodisé
S2I Aluminium Titanium Anodisé
SB1 Aluminium Inox Anodisé
V01 Aluminium Blanc Semi-Lustre Peint à Poudre
V12 Aluminium Noir Mat Peint à Poudre
LU5 Aluminium Chrome Anodisé
S2R Aluminium Cuivre Anodisé
S2Q Aluminium Or Anodisé
Autres Couleurs Disponibles DE L'ITALIE

PERFIL "GOLA"

ANGULO 90° INTERNO EN ALUMINIO PARA PERFIL "GOLA" 8006
50S Aluminio Anodizado Claro
S2I Aluminio Anodizado Titanio
SB1 Aluminio Anodizado Inox
V01 Aluminio Blanco Semi-Brillo Barnizado
V12 Aluminio Negro Mate Barnizado
LU5 Aluminio Anodizado Cromo
S2R Aluminio Anodizado Cobre
S2Q Aluminio Anodizado Oro
Otros Colores Disponibles DE ITALIA

COLORS	ITEM NUMBER	PCS PER BOX	BOX DIMENSION mm W x D x H	BOX DIMENSION inch W x D x H	BOX WEIGHT KG	BOX WEIGHT LB	STOCK IN AMERICA MSRP PRICING USD METER	FOOT	EACH	BOX
50S	UAG8006-50S	5	290 x 85 x 60	11 3/8" x 3 3/8" x 2 3/8"	0.45	0.99			32.935	164.675
S2I	UAG8006-S2I	5	290 x 85 x 60	11 3/8" x 3 3/8" x 2 3/8"	0.45	0.99			39.524	197.620
SB1	UAG8006-SB1	5	290 x 85 x 60	11 3/8" x 3 3/8" x 2 3/8"	0.45	0.99			39.524	197.620
V01	UAG8006-V01	5	290 x 85 x 60	11 3/8" x 3 3/8" x 2 3/8"	0.45	0.99			34.194	170.970
V12	UAG8006-V12	5	290 x 85 x 60	11 3/8" x 3 3/8" x 2 3/8"	0.45	0.99			34.087	170.435
							AVAILABLE FROM ITALY MSRP PRICING USD			
LU5	AG8006-LU5	<<<<< MINIMUM ORDER AND PACKAGING TO BE CONFIRMED >>>>>							36.275	
S2R	AG8006-S2R	<<<<< MINIMUM ORDER AND PACKAGING TO BE CONFIRMED >>>>>							36.299	
S2Q	AG8006-S2Q	<<<<< MINIMUM ORDER AND PACKAGING TO BE CONFIRMED >>>>>							40.388	

SG8006

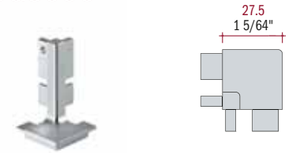

"GOLA" PROFILES

90° EXTERNAL ALUMINUM CORNER FOR "GOLA" PROFILES 8006
50S Aluminum Clear Anodize
S2I Aluminum Titanium Anodize
SB1 Aluminum Stainless Anodize
V01 Aluminum White Semi-Gloss Powder Coated
V12 Aluminum Black Matt Powder Coated
LU5 Aluminum Chrome Anodize
S2R Aluminum Copper Anodize
S2Q Aluminum Gold Anodize
Other Colors Available FROM ITALY

PROFILÉ "GOLA"

COIN EXTERNE 90° EN ALUMINIUM POUR PROFILÉ "GOLA" 8006
50S Aluminium Clair Anodisé
S2I Aluminium Titanium Anodisé
SB1 Aluminium Inox Anodisé
V01 Aluminium Blanc Semi-Lustre Peint à Poudre
V12 Aluminium Noir Mat Peint à Poudre
LU5 Aluminium Chrome Anodisé
S2R Aluminium Cuivre Anodisé
S2Q Aluminium Or Anodisé
Autres Couleurs Disponibles DE L'ITALIE

PERFIL "GOLA"

ANGULO EXTERNO 90° EN ALUMINIO PARA PERFIL "GOLA" 8006
50S Aluminio Anodizado Claro
S2I Aluminio Anodizado Titanio
SB1 Aluminio Anodizado Inox
V01 Aluminio Blanco Semi-Brillo Barnizado
V12 Aluminio Negro Mate Barnizado
LU5 Aluminio Anodizado Cromo
S2R Aluminio Anodizado Cobre
S2Q Aluminio Anodizado Oro
Otros Colores Disponibles DE ITALIA

COLORS	ITEM NUMBER	PCS PER BOX	BOX DIMENSION mm W x D x H	BOX DIMENSION inch W x D x H	BOX WEIGHT KG	BOX WEIGHT LB	STOCK IN AMERICA MSRP PRICING USD METER	FOOT	EACH	BOX
50S	USG8006-50S	5	290 x 85 x 60	11 3/8" x 3 3/8" x 2 3/8"	0.20	0.44			43.102	215.510
S2I	USG8006-S2I	5	290 x 85 x 60	11 3/8" x 3 3/8" x 2 3/8"	0.20	0.44			50.199	250.995
SB1	USG8006-SB1	5	290 x 85 x 60	11 3/8" x 3 3/8" x 2 3/8"	0.20	0.44			50.199	250.995
V01	USG8006-V01	5	290 x 85 x 60	11 3/8" x 3 3/8" x 2 3/8"	0.20	0.44			41.159	205.795
V12	USG8006-V12	5	290 x 85 x 60	11 3/8" x 3 3/8" x 2 3/8"	0.20	0.44			41.053	205.265
							AVAILABLE FROM ITALY MSRP PRICING USD			
LU5	SG8006-LU5	<<<<< MINIMUM ORDER AND PACKAGING TO BE CONFIRMED >>>>>							40.836	
S2R	SG8006-S2R	<<<<< MINIMUM ORDER AND PACKAGING TO BE CONFIRMED >>>>>							47.213	
S2Q	SG8006-S2Q	<<<<< MINIMUM ORDER AND PACKAGING TO BE CONFIRMED >>>>>							43.730	

CF8006TP

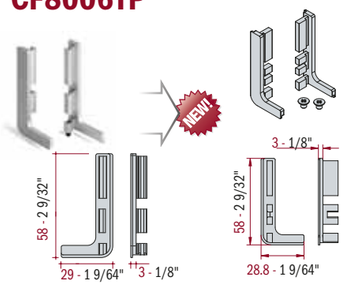

"GOLA" PROFILES

OPENED ALUMINUM END CAP FOR "GOLA" PROFILES 8006
50S Aluminum Clear Anodize
S2I Aluminum Titanium Anodize
SB1 Aluminum Stainless Anodize
V01 Aluminum White Semi-Gloss Powder Coated
V12 Aluminum Black Matt Powder Coated
LU5 Aluminum Chrome Anodize
S2R Aluminum Copper Anodize
S2Q Aluminum Gold Anodize
Other Colors Available FROM ITALY

PROFILÉ "GOLA"

EMBOUT OUVERT EN ALUMINUM POUR PROFILÉ "GOLA" 8006
50S Aluminium Clair Anodisé
S2I Aluminium Titanium Anodisé
SB1 Aluminium Inox Anodisé
V01 Aluminium Blanc Semi-Lustre Peint à Poudre
V12 Aluminium Noir Mat Peint à Poudre
LU5 Aluminium Chrome Anodisé
S2R Aluminium Cuivre Anodisé
S2Q Aluminium Or Anodisé
Autres Couleurs Disponibles DE L'ITALIE

PERFIL "GOLA"

TAPAS ABIEETAS EN ALUMINIO PARA PERFIL "GOLA" 8006
50S Aluminio Anodizado Claro
S2I Aluminio Anodizado Titanio
SB1 Aluminio Anodizado Inox
V01 Aluminio Blanco Semi-Brillo Barnizado
V12 Aluminio Negro Mate Barnizado
LU5 Aluminio Anodizado Cromo
S2R Aluminio Anodizado Cobre
S2Q Aluminio Anodizado Oro
Otros Colores Disponibles DE ITALIA

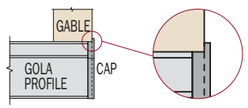

OVERLAPPING DESIGN

COLORS	ITEM NUMBER	PAIRS PER BOX	BOX DIMENSION mm W x D x H	BOX DIMENSION inch W x D x H	BOX WEIGHT KG	BOX WEIGHT LB	STOCK IN AMERICA MSRP PRICING USD PAIR	STOCK IN AMERICA MSRP PRICING USD BOX
50S	UCF8006TP50S	5	145 x 95 x 85	5 3/4" x 3 3/4" x 3 3/8"	0.15	0.33	42.090	210.450
S2I	UCF8006TPS2I	5	145 x 95 x 85	5 3/4" x 3 3/4" x 3 3/8"	0.15	0.33	56.966	284.830
SB1	UCF8006TPSB1	5	145 x 95 x 85	5 3/4" x 3 3/4" x 3 3/8"	0.15	0.33	56.966	284.830
V01	UCF8006TPV01	5	145 x 95 x 85	5 3/4" x 3 3/4" x 3 3/8"	0.15	0.33	41.181	205.905
V12	UCF8006TPV12	5	145 x 95 x 85	5 3/4" x 3 3/4" x 3 3/8"	0.15	0.33	40.961	204.805
							AVAILABLE FROM ITALY MSRP PRICING USD	
LU5	CF8006TPLU5	<<<<< MINIMUM ORDER AND PACKAGING TO BE CONFIRMED >>>>>					45.255	
S2R	CF8006TPS2R	<<<<< MINIMUM ORDER AND PACKAGING TO BE CONFIRMED >>>>>					59.050	
S2Q	CF8006TPS2Q	<<<<< MINIMUM ORDER AND PACKAGING TO BE CONFIRMED >>>>>					58.634	

CF8006TP C

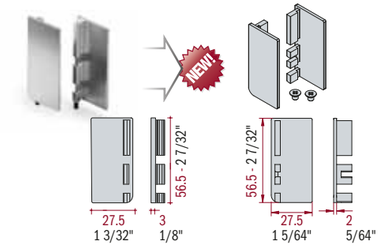

"GOLA" PROFILES

CLOSED ALUMINUM END CAP FOR "GOLA" PROFILES 8006
50S Aluminum Clear Anodize
SB1 Aluminum Stainless Anodize
V01 Aluminum White Semi-Gloss Powder Coated
V12 Aluminum Black Matt Powder Coated
LU5 Aluminum Chrome Anodize
S2R Aluminum Copper Anodize
S2Q Aluminum Gold Anodize
S2I Aluminum Titanium Anodize
Other Colors Available FROM ITALY

PROFILÉ "GOLA"

EMBOUT FERMÉ EN ALUMINUM POUR PROFILÉ "GOLA" 8006
50S Aluminium Clair Anodisé
SB1 Aluminium Inox Anodisé
V01 Aluminium Blanc Semi-Lustre Peint à Poudre
V12 Aluminium Noir Mat Peint à Poudre
LU5 Aluminium Chrome Anodisé
S2R Aluminium Cuivre Anodisé
S2Q Aluminium Or Anodisé
S2I Aluminium Titanium Anodisé
Autres Couleurs Disponibles DE L'ITALIE

PERFIL "GOLA"

TAPAS CERRADAS EN ALUMINIO PARA PERFIL "GOLA" 8006
50S Aluminio Anodizado Claro
SB1 Aluminio Anodizado Inox
V01 Aluminio Blanco Semi-Brillo Barnizado
V12 Aluminio Negro Mate Barnizado
LU5 Aluminio Anodizado Cromo
S2R Aluminio Anodizado Cobre
S2Q Aluminio Anodizado Oro
S2I Aluminio Anodizado Titanio
Otros Colores Disponibles DE ITALIA

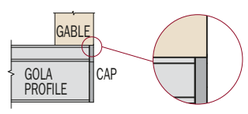

FLUSH DESIGN

COLORS	ITEM NUMBER	PAIRS PER BOX	BOX DIMENSION mm W x D x H	BOX DIMENSION inch W x D x H	BOX WEIGHT KG	BOX WEIGHT LB	STOCK IN AMERICA MSRP PRICING USD PAIR	STOCK IN AMERICA MSRP PRICING USD BOX
50S	UCF8006TP50SC	5	145 x 95 x 85	5 3/4" x 3 3/4" x 3 3/8"	0.20	0.44	19.968	99.840
S2I	UCF8006TPS2IC	5	145 x 95 x 85	5 3/4" x 3 3/4" x 3 3/8"	0.20	0.44	20.793	103.965
SB1	UCF8006TPSB1C	5	145 x 95 x 85	5 3/4" x 3 3/4" x 3 3/8"	0.20	0.44	21.304	106.520
V01	UCF8006TPV01C	5	145 x 95 x 85	5 3/4" x 3 3/4" x 3 3/8"	0.20	0.44	20.629	103.145
V12	UCF8006TPV12C	5	145 x 95 x 85	5 3/4" x 3 3/4" x 3 3/8"	0.20	0.44	20.686	103.430
							AVAILABLE FROM ITALY MSRP PRICING USD	
LU5	CF8006TPLU5C	<<<<< MINIMUM ORDER AND PACKAGING TO BE CONFIRMED >>>>>					15.879	
S2R	CF8006TPS2RC	<<<<< MINIMUM ORDER AND PACKAGING TO BE CONFIRMED >>>>>					50.979	
S2Q	CF8006TPS2QC	<<<<< MINIMUM ORDER AND PACKAGING TO BE CONFIRMED >>>>>					48.248	

TGPA8006

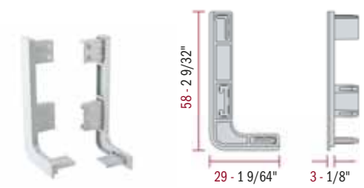

"GOLA" PROFILES

OPENED PLASTIC END CAP FOR "GOLA" PROFILES 8006
13 = Color Match for 50S
32 = Color Match for S2I & SB1
02 = Color Match for V01
06 = Color Match for V12
31 = Color Match for LU5
70 = Color match for S2R
71 = Color match for S2Q

PROFILÉ "GOLA"

EMBOUT OUVERT EN PLASTIQUE POUR PROFILÉ "GOLA" 8006
13 = Couleur Correspondante pour 50S
32 = Couleur Correspondante pour S2I & SB1
02 = Couleur Correspondante pour V01
06 = Couleur Correspondante pour V12
31 = Couleur Correspondante pour LU5
70 = Couleur Correspondante pour S2R
71 = Couleur Correspondante pour S2Q

PERFIL "GOLA"

TAPAS ABIERTAS EN PLASTICO PARA PERFIL "GOLA" 8006
13 = Ajuste de Color 50S
32 = Ajuste de Color S2I & SB1
02 = Ajuste de Color V01
06 = Ajuste de Color V12
31 = Ajuste de Color LU5
70 = Ajuste de Color S2R
71 = Ajuste de Color S2Q

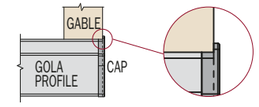

OVERLAPPING DESIGN

COLORS	ITEM NUMBER	PAIRS PER BOX	BOX DIMENSION mm W x D x H	BOX DIMENSION inch W x D x H	BOX WEIGHT KG	BOX WEIGHT LB	STOCK IN AMERICA MSRP PRICING USD PAIR	STOCK IN AMERICA MSRP PRICING USD BOX
13	UTGPA8006-13	25	145 x 95 x 85	5 3/4" x 3 3/4" x 3 3/8"	0.35	0.77	3.268	81.700
32	UTGPA8006-32	25	145 x 95 x 85	5 3/4" x 3 3/4" x 3 3/8"	0.35	0.77	11.539	288.475
02	UTGPA8006-02	25	145 x 95 x 85	5 3/4" x 3 3/4" x 3 3/8"	0.35	0.77	3.268	81.700
06	UTGPA8006-06	25	145 x 95 x 85	5 3/4" x 3 3/4" x 3 3/8"	0.35	0.77	3.268	81.700
							AVAILABLE FROM ITALY MSRP PRICING USD	
31	ITTGPA8006-31	<<<<< MINIMUM ORDER AND PACKAGING TO BE CONFIRMED >>>>>					9.674	
70	ITTGPA8006-70A	<<<<< MINIMUM ORDER AND PACKAGING TO BE CONFIRMED >>>>>					4.803	
71	ITTGPA8006-71A	<<<<< MINIMUM ORDER AND PACKAGING TO BE CONFIRMED >>>>>					4.803	

TGPC8006

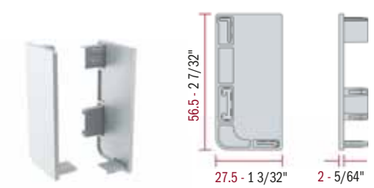

"GOLA" PROFILES

CLOSED PLASTIC END CAP FOR "GOLA" PROFILES 8006
13 = Color Match for 50S
32 = Color Match for S2I & SB1
02 = Color Match for V01
06 = Color Match for V12
31 = Color Match for LU5
70 = Color match for S2R
71 = Color match for S2Q

PROFILÉ "GOLA"

EMBOUT FERMÉ EN PLASTIQUE POUR PROFILÉ "GOLA" 8006
13 = Couleur Correspondante pour 50S
32 = Couleur Correspondante pour S2I & SB1
02 = Couleur Correspondante pour V01
06 = Couleur Correspondante pour V12
31 = Couleur Correspondante pour LU5
70 = Couleur Correspondante pour S2R
71 = Couleur Correspondante pour S2Q

PERFIL "GOLA"

TAPAS CERRADAS EN PLASTICO PARA PERFIL "GOLA" 8006
13 = Ajuste de Color 50S
32 = Ajuste de Color S2I & SB1
02 = Ajuste de Color V01
06 = Ajuste de Color V12
31 = Ajuste de Color LU5
70 = Ajuste de Color S2R
71 = Ajuste de Color S2Q

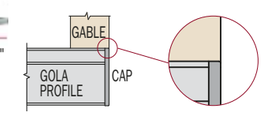

FLUSH DESIGN

COLORS	ITEM NUMBER	PAIRS PER BOX	BOX DIMENSION mm W x D x H	BOX DIMENSION inch W x D x H	BOX WEIGHT KG	BOX WEIGHT LB	STOCK IN AMERICA MSRP PRICING USD PAIR	STOCK IN AMERICA MSRP PRICING USD BOX
13	UTGPC8006-13	25	145 x 95 x 85	5 3/4" x 3 3/4" x 3 3/8"	0.35	0.77	3.637	90.925
32	UTGPC8006-32	25	145 x 95 x 85	5 3/4" x 3 3/4" x 3 3/8"	0.35	0.77	12.978	324.450
02	UTGPC8006-02	25	145 x 95 x 85	5 3/4" x 3 3/4" x 3 3/8"	0.35	0.77	3.637	90.925
06	UTGPC8006-06	25	145 x 95 x 85	5 3/4" x 3 3/4" x 3 3/8"	0.35	0.77	3.637	90.925
							AVAILABLE FROM ITALY MSRP PRICING USD	
31	TGPC8006-31	<<<<< MINIMUM ORDER AND PACKAGING TO BE CONFIRMED >>>>>					8.534	
70	TGPC8006-70A	<<<<< MINIMUM ORDER AND PACKAGING TO BE CONFIRMED >>>>>					4.897	
71	TGPC8006-71A	<<<<< MINIMUM ORDER AND PACKAGING TO BE CONFIRMED >>>>>					4.897	

SU116

SUPPORT FOR "GOLA" PROFILES
8006 - 8007 (SCREWED)

SUPPORT POUR PROFILÉ "GOLA"
8006 - 8007 (VISSÉ)

SOPORTES PARA GOLA
8006 - 8007 (PARA ATORNILLAR)

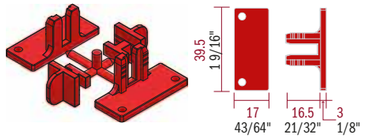

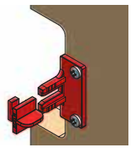

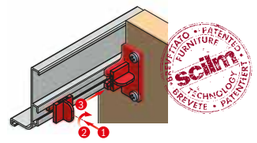

ITEM NUMBER	PAIRS PER BOX	BOX DIMENSION mm W x D x H	BOX DIMENSION inch W x D x H	BOX WEIGHT KG	BOX WEIGHT LB	STOCK IN AMERICA MSRP PRICING USD PAIR	STOCK IN AMERICA MSRP PRICING USD BOX
USU116DS59	100	470 x 170 x 125	18 1/2" x 6 3/4" x 4 7/8"	1.50	3.31	0.851	85.100

SU136

SUPPORT FOR "GOLA" PROFILES
8006 - 8007 (DOWELED)

SUPPORT POUR PROFILÉ "GOLA"
8006 - 8007 (CHEVILLÉ)

SOPORTES PARA GOLA
8006 - 8007 (PARA TETONES)

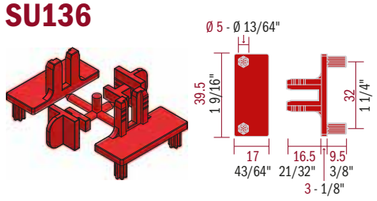

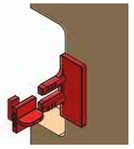

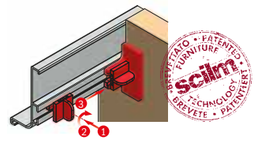

ITEM NUMBER	PAIRS PER BOX	BOX DIMENSION mm W x D x H	BOX DIMENSION inch W x D x H	BOX WEIGHT KG	BOX WEIGHT LB	STOCK IN AMERICA MSRP PRICING USD PAIR	STOCK IN AMERICA MSRP PRICING USD BOX
USU136DS59	100	470 x 150 x 125	18 1/2" x 5 7/8" x 4 7/8"	1.50	3.31	0.852	85.200

8007

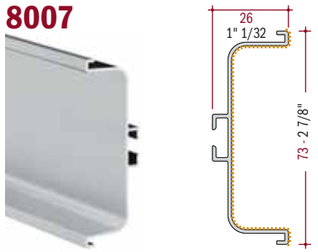

"GOLA" PROFILES

"GOLA" HORIZONTAL ALUMINUM SPACER CHANNEL PROFILE FOR BASE CABINET
50S Aluminum Clear Anodize
S2I Aluminum Titanium Anodize
SB1 Aluminum Stainless Anodize
V01 Aluminum White Semi-Gloss Powder Coated
V12 Aluminum Black Matt Powder Coated
LU5 Aluminum Chrome Anodize
S2R Aluminum Copper Anodize
S2Q Aluminum Gold Anodize
Other Colors and Lengths Available FROM ITALY

PROFILÉ "GOLA"

"GOLA" PROFILÉ D'ESPACEMENT HORIZONTALE EN ALUMINIUM POUR ARMOIRE DU BAS
50S Aluminium Clair Anodisé
S2I Aluminium Titanium Anodisé
SB1 Aluminium Inox Anodisé
V01 Aluminium Blanc Semi-Lustre Peint à Poudre
V12 Aluminium Noir Mat Peint à Poudre
LU5 Aluminium Chrome Anodisé
S2R Aluminium Cuivre Anodisé
S2Q Aluminium Or Anodisé
Autres Couleurs et Longueurs Disponibles DE L'ITALIE

PERFIL "GOLA"

PERFIL GOLA HORIZONTAL EN ALUMINIO PARA MUEBLE BAJO
50S Aluminio Anodizado Claro
S2I Aluminio Anodizado Titanio
SB1 Aluminio Anodizado Inox
V01 Aluminio Blanco Semi-Brillo Barnizado
V12 Aluminio Negro Mate Barnizado
LU5 Aluminio Anodizado Cromo
S2R Aluminio Anodizado Cobre
S2Q Aluminio Anodizado Oro
Otros Colores y Dimensiones Disponibles DE ITALIA

COLORS	ITEM NUMBER			PCS PER BOX	BOX DIMENSION mm W x D x H	BOX DIMENSION inch W x D x H	BOX WEIGHT KG	BOX WEIGHT LB	STOCK IN AMERICA MSRP PRICING USD METER	FOOT	EACH	BOX
50S	U800750SL27	2670	105 1/8"	5	2740 x 125 x 95	107 7/8" x 4 7/8" x 3 3/4"	7.15	15.76	23.192	7.069	61.923	309.613
50S	U800750SL41	4100	161 7/16"	5	4250 x 125 x 95	167 3/8" x 4 7/8" x 3 3/4"	10.35	22.82	20.824	6.347	85.378	426.892
S2I	U8007S2IL27	2670	105 1/8"	5	2740 x 125 x 95	107 7/8" x 4 7/8" x 3 3/4"	7.15	15.76	31.881	9.717	85.122	425.611
S2I	U8007S2IL41	4100	161 7/16"	5	4250 x 125 x 95	167 3/8" x 4 7/8" x 3 3/4"	10.35	22.82	29.641	9.035	121.528	607.641
SB1	U8007SB1L27	2670	105 1/8"	5	2740 x 125 x 95	107 7/8" x 4 7/8" x 3 3/4"	7.15	15.76	31.881	9.717	85.122	425.611
SB1	U8007SB1L41	4100	161 7/16"	5	4250 x 125 x 95	167 3/8" x 4 7/8" x 3 3/4"	10.35	22.82	31.055	9.466	127.326	636.628
V01	U8007V01L27	2670	105 1/8"	5	2740 x 125 x 95	107 7/8" x 4 7/8" x 3 3/4"	7.15	15.76	21.664	6.603	57.843	289.214
V01	U8007V01L41	4100	161 7/16"	5	4250 x 125 x 95	167 3/8" x 4 7/8" x 3 3/4"	10.35	22.82	20.395	6.216	83.620	418.098
V12	U8007V12L27	2670	105 1/8"	5	2740 x 125 x 95	107 7/8" x 4 7/8" x 3 3/4"	7.15	15.76	24.283	7.401	64.836	324.178
V12	U8007V12L41	4100	161 7/16"	5	4250 x 125 x 95	167 3/8" x 4 7/8" x 3 3/4"	10.35	22.82	22.269	6.788	91.303	456.515
									AVAILABLE FROM ITALY MSRP PRICING USD			
LU5	8007LU5L41	4100	161 7/16"	<<<<< MINIMUM ORDER AND PACKAGING TO BE CONFIRMED >>>>>					21.724	6.621	89.068	
S2R	8007S2RL41	4100	161 7/16"	<<<<< MINIMUM ORDER AND PACKAGING TO BE CONFIRMED >>>>>					29.129	8.879	119.429	
S2Q	8007S2QL41	4100	161 7/16"	<<<<< MINIMUM ORDER AND PACKAGING TO BE CONFIRMED >>>>>					25.908	7.897	106.223	

GG8007

ALUMINUM LINEAR JUNCTION FOR "GOLA" PROFILES 8007
50S Aluminum Clear Anodize
S2I Aluminum Titanium Anodize
SB1 Aluminum Stainless Anodize
V01 Aluminum White Semi-Gloss Powder Coated
V12 Aluminum Black Matt Powder Coated
LU5 Aluminum Chrome Anodize
S2R Aluminum Copper Anodize
S2Q Aluminum Gold Anodize
Other Colors Available FROM ITALY

JONCTION LINÉAIRE EN ALUMINIUM POUR PROFILÉ "GOLA" 8007
50S Aluminium Clair Anodisé
S2I Aluminium Titanium Anodisé
SB1 Aluminium Inox Anodisé
V01 Aluminium Blanc Semi-Lustre Peint à Poudre
V12 Aluminium Noir Mat Peint à Poudre
LU5 Aluminium Chrome Anodisé
S2R Aluminium Cuivre Anodisé
S2Q Aluminium Or Anodisé
Autres Couleurs Disponibles DE L'ITALIE

UNIÓN LINEAL EN ALUMINIO PERFIL "GOLA" 8007
50S Aluminio Anodizado Claro
S2I Aluminio Anodizado Titanio
SB1 Aluminio Anodizado Inox
V01 Aluminio Blanco Semi-Brillo Barnizado
V12 Aluminio Negro Mate Barnizado
LU5 Aluminio Anodizado Cromo
S2R Aluminio Anodizado Cobre
S2Q Aluminio Anodizado Oro
Otros Colores Disponibles DE ITALIA

COLORS	ITEM NUMBER	PCS PER BOX	BOX DIMENSION mm W x D x H	BOX DIMENSION inch W x D x H	BOX WEIGHT KG	BOX WEIGHT LB	STOCK IN AMERICA MSRP PRICING USD EACH	BOX
50S	UGG800701-50S	10	150 x 100 x 90	5 7/8" x 3 7/8" x 3 1/2"	0.25	0.55	37.824	378.240
S2I	UGG800701-S2I	10	150 x 100 x 90	5 7/8" x 3 7/8" x 3 1/2"	0.25	0.55	42.908	429.080
SB1	UGG800701-SB1	10	150 x 100 x 90	5 7/8" x 3 7/8" x 3 1/2"	0.25	0.55	42.908	429.080
V01	UGG800701-V01	10	150 x 100 x 90	5 7/8" x 3 7/8" x 3 1/2"	0.25	0.55	32.313	323.130
V12	UGG800701-V12	10	150 x 100 x 90	5 7/8" x 3 7/8" x 3 1/2"	0.25	0.55	32.206	322.060
							AVAILABLE FROM ITALY MSRP PRICING USD	
LU5	GG800701-LU5	<<<<< MINIMUM ORDER AND PACKAGING TO BE CONFIRMED >>>>>					32.669	
S2R	GG800701-S2R	<<<<< MINIMUM ORDER AND PACKAGING TO BE CONFIRMED >>>>>					48.741	
S2Q	GG800701-S2Q	<<<<< MINIMUM ORDER AND PACKAGING TO BE CONFIRMED >>>>>					48.741	

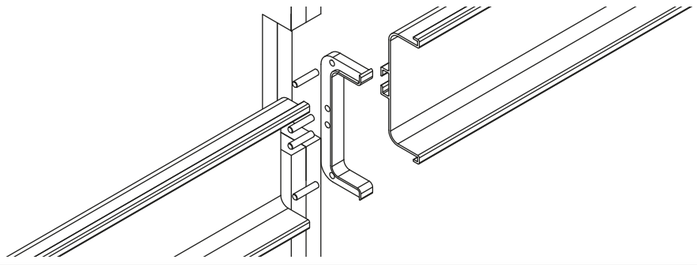

AG8007

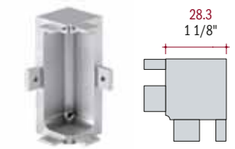

"GOLA" PROFILES

90° INTERNAL ALUMINUM CORNER FOR "GOLA" PROFILES 8007
50S Aluminum Clear Anodize
S2I Aluminum Titanium Anodize
SB1 Aluminum Stainless Anodize
V01 Aluminum White Semi-Gloss Powder Coated
V12 Aluminum Black Matt Powder Coated
LU5 Aluminum Chrome Anodize
S2R Aluminum Copper Anodize
S2Q Aluminum Gold Anodize
Other Colors Available FROM ITALY

PROFILÉ "GOLA"

COIN INTERNE 90° EN ALUMINIUM POUR PROFILÉ "GOLA" 8007
50S Aluminium Clair Anodisé
S2I Aluminium Titanium Anodisé
SB1 Aluminium Inox Anodisé
V01 Aluminium Blanc Semi-Lustre Peint à Poudre
V12 Aluminium Noir Mat Peint à Poudre
LU5 Aluminium Chrome Anodisé
S2R Aluminium Cuivre Anodisé
S2Q Aluminium Or Anodisé
Autres Couleurs Disponibles DE L'ITALIE

PERFIL "GOLA"

ANGULO INTERNO 90º EN ALUMINIO PATA PERFIL GOLA 8007
50S Aluminio Anodizado Claro
S2I Aluminio Anodizado Titanio
SB1 Aluminio Anodizado Inox
V01 Aluminio Blanco Semi-Brillo Barnizado
V12 Aluminio Negro Mate Barnizado
LU5 Aluminio Anodizado Cromo
S2R Aluminio Anodizado Cobre
S2Q Aluminio Anodizado Oro
Otros Colores Disponibles DE ITALIA

COLORS	ITEM NUMBER	PCS PER BOX	BOX DIMENSION mm W x D x H	BOX DIMENSION inch W x D x H	BOX WEIGHT KG	BOX WEIGHT LB	STOCK IN AMERICA MSRP PRICING USD EACH	BOX
50S	UAG8007-50S	5	290 x 85 x 60	11 3/8" x 3 3/8" x 2 3/8"	0.55	1.21	66.859	334.295
S2I	UAG8007-S2I	5	290 x 85 x 60	11 3/8" x 3 3/8" x 2 3/8"	0.55	1.21	70.314	351.570
SB1	UAG8007-SB1	5	290 x 85 x 60	11 3/8" x 3 3/8" x 2 3/8"	0.55	1.21	70.314	351.570
V01	UAG8007-V01	5	290 x 85 x 60	11 3/8" x 3 3/8" x 2 3/8"	0.55	1.21	64.968	324.840
V12	UAG8007-V12	5	290 x 85 x 60	11 3/8" x 3 3/8" x 2 3/8"	0.55	1.21	64.861	324.305
							AVAILABLE FROM ITALY MSRP PRICING USD	
LU5	AG8007-LU5	<<<<< MINIMUM ORDER AND PACKAGING TO BE CONFIRMED >>>>>					56.580	
S2R	AG8007-S2R	<<<<< MINIMUM ORDER AND PACKAGING TO BE CONFIRMED >>>>>					63.984	
S2Q	AG8007-S2Q	<<<<< MINIMUM ORDER AND PACKAGING TO BE CONFIRMED >>>>>					64.948	

SG8007

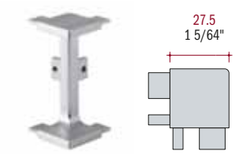

"GOLA" PROFILES

90° EXTERNAL ALUMINUM CORNER FOR "GOLA" PROFILES 8007
50S Aluminum Clear Anodize
S2I Aluminum Titanium Anodize
SB1 Aluminum Stainless Anodize
V01 Aluminum White Semi-Gloss Powder Coated
V12 Aluminum Black Matt Powder Coated
LU5 Aluminum Chrome Anodize
S2R Aluminum Copper Anodize
S2Q Aluminum Gold Anodize
Other Colors Available FROM ITALY

PROFILÉ "GOLA"

COIN EXTERNE 90° EN ALUMINIUM POUR PROFILÉ "GOLA" 8007
50S Aluminium Clair Anodisé
S2I Aluminium Titanium Anodisé
SB1 Aluminium Inox Anodisé
V01 Aluminium Blanc Semi-Lustre Peint à Poudre
V12 Aluminium Noir Mat Peint à Poudre
LU5 Aluminium Chrome Anodisé
S2R Aluminium Cuivre Anodisé
S2Q Aluminium Or Anodisé
Autres Couleurs Disponibles DE L'ITALIE

PERFIL "GOLA"

ANGULO EXTERNO 90º EN ALUMINIO PARA PERFIL "GOLA" 8007
50S Aluminio Anodizado Claro
S2I Aluminio Anodizado Titanio
SB1 Aluminio Anodizado Inox
V01 Aluminio Blanco Semi-Brillo Barnizado
V12 Aluminio Negro Mate Barnizado
LU5 Aluminio Anodizado Cromo
S2R Aluminio Anodizado Cobre
S2Q Aluminio Anodizado Oro
Otros Colores Disponibles DE ITALIA

COLORS	ITEM NUMBER	PCS PER BOX	BOX DIMENSION mm W x D x H	BOX DIMENSION inch W x D x H	BOX WEIGHT KG	BOX WEIGHT LB	STOCK IN AMERICA MSRP PRICING USD EACH	BOX
50S	USG8007-50S	5	290 x 85 x 60	11 3/8" x 3 3/8" x 2 3/8"	0.30	0.66	74.419	372.095
S2I	USG8007-S2I	5	290 x 85 x 60	11 3/8" x 3 3/8" x 2 3/8"	0.30	0.66	81.147	405.735
SB1	USG8007-SB1	5	290 x 85 x 60	11 3/8" x 3 3/8" x 2 3/8"	0.30	0.66	81.147	405.735
V01	USG8007-V01	5	290 x 85 x 60	11 3/8" x 3 3/8" x 2 3/8"	0.30	0.66	72.527	362.635
V12	USG8007-V12	5	290 x 85 x 60	11 3/8" x 3 3/8" x 2 3/8"	0.30	0.66	72.42	362.100
							AVAILABLE FROM ITALY MSRP PRICING USD	
LU5	SG8007-LU5	<<<<< MINIMUM ORDER AND PACKAGING TO BE CONFIRMED >>>>>					69.617	
S2R	SG8007-S2R	<<<<< MINIMUM ORDER AND PACKAGING TO BE CONFIRMED >>>>>					76.428	
S2Q	SG8007-S2Q	<<<<< MINIMUM ORDER AND PACKAGING TO BE CONFIRMED >>>>>					74.970	

CF8007TP

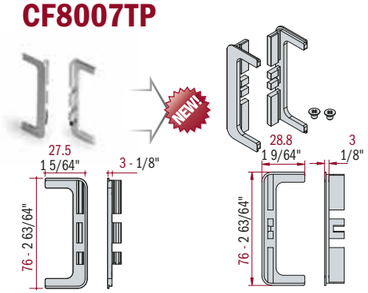

"GOLA" PROFILES

OPENED ALUMINUM END CAP FOR "GOLA" PROFILES 8007
50S Aluminum Clear Anodize
S2I Aluminum Titanium Anodize
SB1 Aluminum Stainless Anodize
V01 Aluminum White Semi-Gloss Powder Coated
V12 Aluminum Black Matt Powder Coated
LU5 Aluminum Chrome Anodize
S2R Aluminum Copper Anodize
S2Q Aluminum Gold Anodize
Other Colors Available FROM ITALY

PROFILÉ "GOLA"

EMBOUT OUVERT EN ALUMINUM POUR PROFILÉ "GOLA" 8007
50S Aluminium Clair Anodisé
S2I Aluminium Titanium Anodisé
SB1 Aluminium Inox Anodisé
V01 Aluminum Blanc Semi-Lustre Peint à Poudre
V12 Aluminium Noir Mat Peint à Poudre
LU5 Aluminium Chrome Anodisé
S2R Aluminium Cuivre Anodisé
S2Q Aluminium Or Anodisé
Autres Couleurs Disponibles DE L'ITALIE

PERFIL "GOLA"

TAPAS ABIEETAS EN ALUMINIO PARA PERFIL "GOLA" 8007
50S Aluminio Anodizado Claro
S2I Aluminio Anodizado Titanio
SB1 Aluminio Anodizado Inox
V01 Aluminio Blanco Semi-Brillo Barnizado
V12 Aluminio Negro Mate Barnizado
LU5 Aluminio Anodizado Cromo
S2R Aluminio Anodizado Cobre
S2Q Aluminio Anodizado Oro
Otros Colores Disponibles DE ITALIA

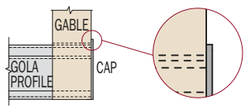

OVERLAPPING DESIGN

COLORS	ITEM NUMBER	PAIRS PER BOX	BOX DIMENSION mm W x D x H	BOX DIMENSION inch W x D x H	BOX WEIGHT KG	BOX WEIGHT LB	STOCK IN AMERICA MSRP PRICING USD PAIR	STOCK IN AMERICA MSRP PRICING USD BOX
50S	UCF8007TP50S	5	145 x 95 x 85	5 3/4" x 3 3/4" x 3 3/8"	0.25	0.55	40.098	200.490
S2I	UCF8007TPS2I	5	145 x 95 x 85	5 3/4" x 3 3/4" x 3 3/8"	0.25	0.55	57.272	286.360
SB1	UCF8007TPSB1	5	145 x 95 x 85	5 3/4" x 3 3/4" x 3 3/8"	0.25	0.55	57.272	286.360
V01	UCF8007TPV01	5	145 x 95 x 85	5 3/4" x 3 3/4" x 3 3/8"	0.25	0.55	39.582	197.910
V12	UCF8007TPV12	5	145 x 95 x 85	5 3/4" x 3 3/4" x 3 3/8"	0.25	0.55	39.373	196.865
							AVAILABLE FROM ITALY MSRP PRICING USD	
LU5	CF8007TPLU5		<<<<< MINIMUM ORDER AND PACKAGING TO BE CONFIRMED >>>>>				43.061	
S2R	CF8007TPS2R		<<<<< MINIMUM ORDER AND PACKAGING TO BE CONFIRMED >>>>>				49.307	
S2Q	CF8007TPS2Q		<<<<< MINIMUM ORDER AND PACKAGING TO BE CONFIRMED >>>>>				48.962	

CF8007TPI

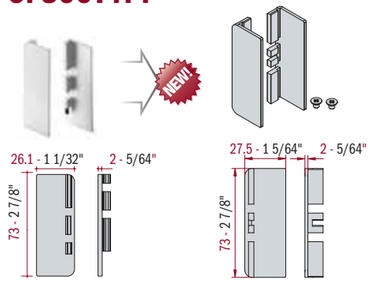

"GOLA" PROFILES

CLOSED ALUMINUM END CAP FOR "GOLA" PROFILES 8007
50S Aluminum Clear Anodize
S2I Aluminum Titanium Anodize
SB1 Aluminum Stainless Anodize
V01 Aluminum White Semi-Gloss Powder Coated
V12 Aluminum Black Matt Powder Coated
LU5 Aluminum Chrome Anodize
S2R Aluminum Copper Anodize
S2Q Aluminum Gold Anodize
Other Colors Available FROM ITALY

PROFILÉ "GOLA"

EMBOUT FERMÉ EN ALUMINUM POUR PROFILÉ "GOLA" 8007
50S Aluminium Clair Anodisé
S2I Aluminium Titanium Anodisé
SB1 Aluminium Inox Anodisé
V01 Aluminium Blanc Semi-Lustre Peint à Poudre
V12 Aluminium Noir Mat Peint à Poudre
LU5 Aluminium Chrome Anodisé
S2R Aluminium Cuivre Anodisé
S2Q Aluminium Or Anodisé
Autres Couleurs Disponibles DE L'ITALIE

PERFIL "GOLA"

TAPAS CERRADAS EN ALUMINIO PARA PERFIL "GOLA" 8007
50S Aluminio Anodizado Claro
S2I Aluminio Anodizado Titanio
SB1 Aluminio Anodizado Inox
V01 Aluminio Blanco Semi-Brillo Barnizado
V12 Aluminio Negro Mate Barnizado
LU5 Aluminio Anodizado Cromo
S2R Aluminio Anodizado Cobre
S2Q Aluminio Anodizado Oro
Otros Colores Disponibles DE ITALIA

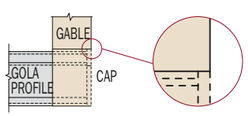

FLUSH DESIGN

COLORS	ITEM NUMBER	PAIRS PER BOX	BOX DIMENSION mm W x D x H	BOX DIMENSION inch W x D x H	BOX WEIGHT KG	BOX WEIGHT LB	STOCK IN AMERICA MSRP PRICING USD PAIR	STOCK IN AMERICA MSRP PRICING USD BOX
50S	UCF8007TPI50S	5	145 x 95 x 85	5 3/4" x 3 3/4" x 3 3/8"	0.25	0.55	20.460	102.300
S2I	UCF8007TPIS2I	5	145 x 95 x 85	5 3/4" x 3 3/4" x 3 3/8"	0.25	0.55	21.492	107.460
SB1	UCF8007TPISB1	5	145 x 95 x 85	5 3/4" x 3 3/4" x 3 3/8"	0.25	0.55	22.131	110.655
V01	UCF8007TPIV01	5	145 x 95 x 85	5 3/4" x 3 3/4" x 3 3/8"	0.25	0.55	20.674	103.370
V12	UCF8007TPIV12	5	145 x 95 x 85	5 3/4" x 3 3/4" x 3 3/8"	0.25	0.55	21.175	105.875
							AVAILABLE FROM ITALY MSRP PRICING USD	
LU5	CF8007TPILU5C		<<<<< MINIMUM ORDER AND PACKAGING TO BE CONFIRMED >>>>>				16.474	
S2R	CF8007TPIS2RC		<<<<< MINIMUM ORDER AND PACKAGING TO BE CONFIRMED >>>>>				51.464	
S2Q	CF8007TPIS2QC		<<<<< MINIMUM ORDER AND PACKAGING TO BE CONFIRMED >>>>>				51.211	

TGPA8007

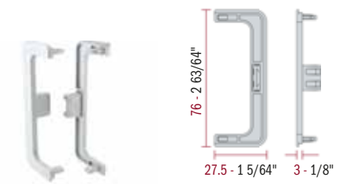

"GOLA" PROFILES

OPENED PLASTIC END CAP FOR "GOLA" PROFILES 8007
13 = Color Match for 50S
32 = Color Match for S2I & SB1
02 = Color Match for V01
06 = Color Match for V12
31 = Color Match for LU5
70 = Color match for S2R
71 = Color match for S2Q

PROFILÉ "GOLA"

EMBOUT OUVERT EN PLASTIQUE POUR PROFILÉ "GOLA" 8007
13 = Couleur Correspondante pour 50S
32 = Couleur Correspondante pour S2I & SB1
02 = Couleur Correspondante pour V01
06 = Couleur Correspondante pour V12
31 = Couleur Correspondante pour LU5
70 = Couleur Correspondante pour S2R
71 = Couleur Correspondante pour S2Q

PERFIL "GOLA"

TAPAS ABIERTAS EN PLASTICO PARA PERFIL "GOLA" 8007
13 = Ajuste de Color 50S
32 = Ajuste de Color S2I& SB1
02 = Ajuste de Color V01
06 = Ajuste de Color V12
31 = Ajuste de Color LU5
70 = Ajuste de Color S2R
71 = Ajuste de Color S2Q

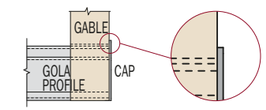

OVERLAPPING DESIGN

COLORS	ITEM NUMBER	PAIRS PER BOX	BOX DIMENSION mm W x D x H	BOX DIMENSION inch W x D x H	BOX WEIGHT KG	BOX WEIGHT LB	STOCK IN AMERICA MSRP PRICING USD PAIR	STOCK IN AMERICA MSRP PRICING USD BOX
13	UTGPA8007-13	25	145 x 95 x 85	5 3/4" x 3 3/4" x 3 3/8"	0.35	0.77	3.268	81.700
32	UTGPA8007-32	25	145 x 95 x 85	5 3/4" x 3 3/4" x 3 3/8"	0.35	0.77	11.539	288.475
02	UTGPA8007-02	25	145 x 95 x 85	5 3/4" x 3 3/4" x 3 3/8"	0.35	0.77	3.268	81.700
06	UTGPA8007-06	25	145 x 95 x 85	5 3/4" x 3 3/4" x 3 3/8"	0.35	0.77	3.268	81.700
							AVAILABLE FROM ITALY MSRP PRICING USD	
31	TGPA8007-31		<<<<< MINIMUM ORDER AND PACKAGING TO BE CONFIRMED >>>>>				9.674	
70	TGPA8007-70A		<<<<< MINIMUM ORDER AND PACKAGING TO BE CONFIRMED >>>>>				4.803	
71	TGPA8007-71A		<<<<< MINIMUM ORDER AND PACKAGING TO BE CONFIRMED >>>>>				4.803	

TGPC8007

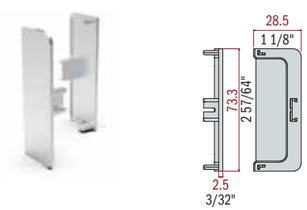

"GOLA" PROFILES

CLOSED PLASTIC END CAP FOR "GOLA" PROFILES 8007
13 = Color Match for 50S
32 = Color Match for S2I & SB1
02 = Color Match for V01
06 = Color Match for V12
31 = Color Match for LU5
70 = Color match for S2R
71 = Color match for S2Q

PROFILÉ "GOLA"

EMBOUT FERMÉ EN PLASTIQUE POUR PROFILÉ "GOLA" 8007
13 = Couleur Correspondante pour 50S
32 = Couleur Correspondante pour S2I & SB1
02 = Couleur Correspondante pour V01
06 = Couleur Correspondante pour V12
31 = Couleur Correspondante pour LU5
70 = Couleur Correspondante pour S2R
71 = Couleur Correspondante pour S2Q

PERFIL "GOLA"

TAPAS CERRADAS EN PLASTICO PARA PERFIL "GOLA" 8007
13 = Ajuste de Color 50S
32 = Ajuste de Color S2I & SB1
02 = Ajuste de Color V01
06 = Ajuste de Color V12
31 = Ajuste de Color LU5
70 = Ajuste de Color S2R
71 = Ajuste de Color S2Q

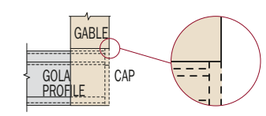

FLUSH DESIGN

COLORS	ITEM NUMBER	PAIRS PER BOX	BOX DIMENSION mm W x D x H	BOX DIMENSION inch W x D x H	BOX WEIGHT KG	BOX WEIGHT LB	STOCK IN AMERICA MSRP PRICING USD PAIR	STOCK IN AMERICA MSRP PRICING USD BOX
13	UTGPC8007-13	25	145 x 95 x 85	5 3/4" x 3 3/4" x 3 3/8"	0.35	0.77	3.637	90.925
32	UTGPC8007-32	25	145 x 95 x 85	5 3/4" x 3 3/4" x 3 3/8"	0.35	0.77	13.027	325.675
02	UTGPC8007-02	25	145 x 95 x 85	5 3/4" x 3 3/4" x 3 3/8"	0.35	0.77	3.637	90.925
06	UTGPC8007-06	25	145 x 95 x 85	5 3/4" x 3 3/4" x 3 3/8"	0.35	0.77	3.637	90.925
							AVAILABLE FROM ITALY MSRP PRICING USD	
31	TGPC8007-31		<<<<< MINIMUM ORDER AND PACKAGING TO BE CONFIRMED >>>>>				8.534	
70	TGPC8007-70A		<<<<< MINIMUM ORDER AND PACKAGING TO BE CONFIRMED >>>>>				4.897	
71	TGPC8007-71A		<<<<< MINIMUM ORDER AND PACKAGING TO BE CONFIRMED >>>>>				4.897	

SU116

SUPPORT FOR "GOLA" PROFILES
8006 - 8007 (SCREWED)

SUPPORT POUR PROFILÉ "GOLA"
8006 - 8007 (VISSÉ)

SOPORTES PARA GOLA
8006 - 8007 (PARA ATORNILLAR)

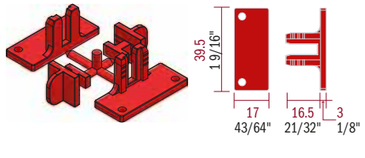

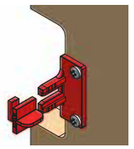

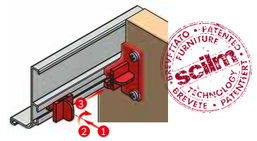

ITEM NUMBER	PAIRS PER BOX	BOX DIMENSION mm W x D x H	BOX DIMENSION inch W x D x H	BOX WEIGHT KG	BOX WEIGHT LB	STOCK IN AMERICA MSRP PRICING USD PAIR	STOCK IN AMERICA MSRP PRICING USD BOX
USU116DS59	100	470 x 170 x 125	18 1/2" x 6 3/4" x 4 7/8"	1.50	3.31	0.851	85.100

SU136

SUPPORT FOR "GOLA" PROFILES
8006 - 8007 (DOWELED)

SUPPORT POUR PROFILÉ "GOLA"
8006 - 8007 (CHEVILLÉ)

SOPORTES PARA GOLA
8006 - 8007 (PARA TETONES)

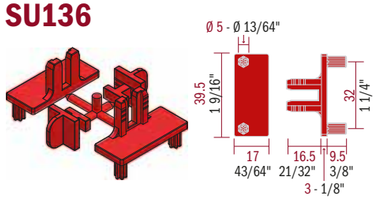

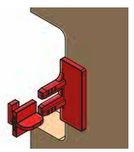

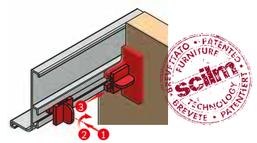

ITEM NUMBER	PAIRS PER BOX	BOX DIMENSION mm W x D x H	BOX DIMENSION inch W x D x H	BOX WEIGHT KG	BOX WEIGHT LB	STOCK IN AMERICA MSRP PRICING USD PAIR	STOCK IN AMERICA MSRP PRICING USD BOX
USU136DS59	100	470 x 150 x 125	18 1/2" x 5 7/8" x 4 7/8"	1.50	3.31	0.852	85.200

6055

ALUMINIUM PROFILE FOR LED STRIP FOR HORIZONTAL GOLA
with pre fitted double-sided tape
50C Aluminium Silver Anodize
85C Aluminium Black Anodize

PROFILÉ EN ALUMINIUM POUR BANDE LED POUR GOLA HORIZONTALE
avec ruban adhésif double face pré-installé
50C Aluminium Argent Anodisé
85C Aluminium Noir Anodisé

PERFIL DE ALUMINIO PARA TIRA DE LED PARA GOLA HORIZONTAL
con cinta de doble cara preinstalada
50C Aluminio Plata Anodizado
85C Aluminio Negro Anodizado

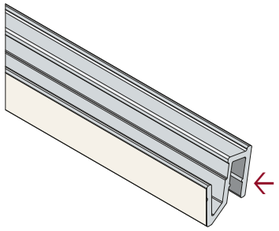

SUITABLE FOR
4x8/4/10mm
SILICON LED STIP
NOT INCLUDED

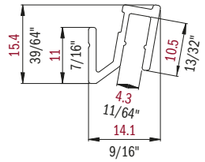

COLORS	ITEM NUMBER	LENGTH mm	LENGTH inch	PCS PER BOX	BOX DIMENSION mm W x D x H	BOX DIMENSION inch W x D x H	BOX WEIGHT KG	BOX WEIGHT LB	STOCK IN AMERICA MSRP PRICING USD METER	FOOT	EACH	BOX
50C	U605550CL205B	2050	80 11/16"	10	2150 x 150 x 50	84 5/8" x 5 7/8" x 2"	5.00	11.02	21.048	6.415	43.148	431.484
50C	U605550CL41B	4100	161 7/16"	10	4200 x 150 x 50	165 3/8" x 5 7/8" x 2"	10.00	22.05	15.260	4.651	62.566	625.660
85C	U605585CL205B	2050	80 11/16"	10	2150 x 150 x 50	84 5/8" x 5 7/8" x 2"	5.00	11.02	28.752	8.764	58.942	589.416
85C	U605585CL41B	4100	161 7/16"	10	4200 x 150 x 50	165 3/8" x 5 7/8" x 2"	10.00	22.05	24.368	7.427	99.909	999.088

ASSEMBLY METHODS

To be used with the following gola profiles:
- 8006
- 8030
- 8007
- 8070

1. Assembly with screw

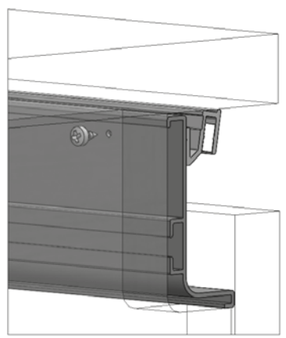

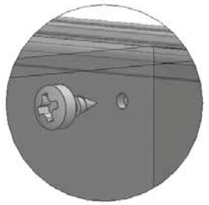

- Use self-threading screw 2,9x6,5TB (not provided)
- Use approximately one screw each meter
- Use "closed" end caps

2. Assembly with double sided tape

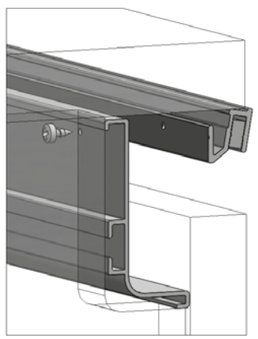

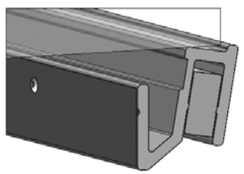

- The use of screws is recommended also when fixing the profile with double sided tape
- Use self-threading screw 2,9x6,5TB (not provided)
- Use approximately one screw each meter
- Use "closed" end caps

6055

Gola profile drilling specifications

8006

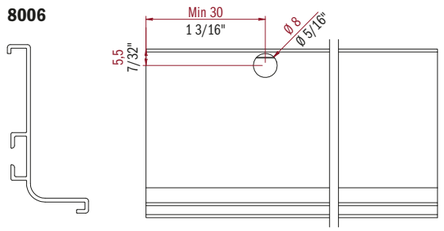

8007

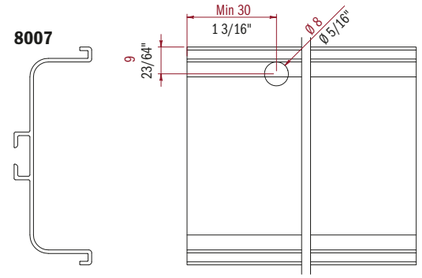

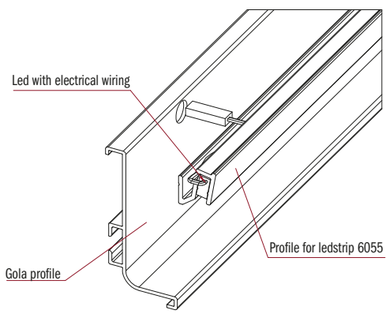

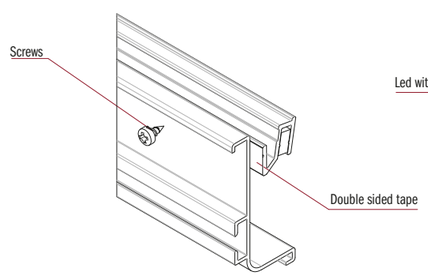

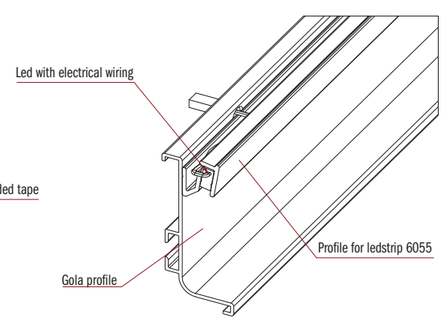

12869

RECESSED ZAMAK HANDLE
Recessed zamak handle.
25I color match for 50S
16M color match for S2I & SB1
620 color match for V01
20M color match for V12
260 color match for LU5

POIGNÉE A ENCASTER EN ZAMAK
Poignée a encastré en zamak.
25I couleur correspondante pour 50S
16M couleur correspondante pour S2I & SB1
620 couleur correspondante pour V01
20M couleur correspondante pour V12
260 couleur correspondante pour LU5

TTIRADOR DE ENCASTRAR EN ZAMAK
Tirador de encastrar en zamak.
25I ajuste de color 50S
16M ajuste de color S2I & SB1
620 ajuste de color V01
20M ajuste de color V12
260 ajuste de color LU5

COLORS	ITEM NUMBER	PCS PER BOX	BOX DIMENSION mm W x D x H	BOX DIMENSION inch W x D x H	BOX WEIGHT KG	BOX WEIGHT LB	STOCK IN AMERICA MSRP PRICING USD EACH	STOCK IN AMERICA MSRP PRICING USD BOX
25I	U12869S.25I	25	310 x 170 x 130	12 1/4" x 6 3/4" x 5 1/8"	1.70	3.75	16.343	408.575
16M	U12869S.16M	25	310 x 170 x 130	12 1/4" x 6 3/4" x 5 1/8"	1.70	3.75	19.335	483.375
620	U12869S.620	25	310 x 170 x 130	12 1/4" x 6 3/4" x 5 1/8"	1.70	3.75	19.335	483.375
20M	U12869S.20M	25	310 x 170 x 130	12 1/4" x 6 3/4" x 5 1/8"	1.70	3.75	16.651	416.275
							AVAILABLE FROM ITALY MSRP PRICING USD	
260	9999C1264		<<<<< MINIMUM ORDER AND PACKAGING TO BE CONFIRMED >>>>>				17.224	

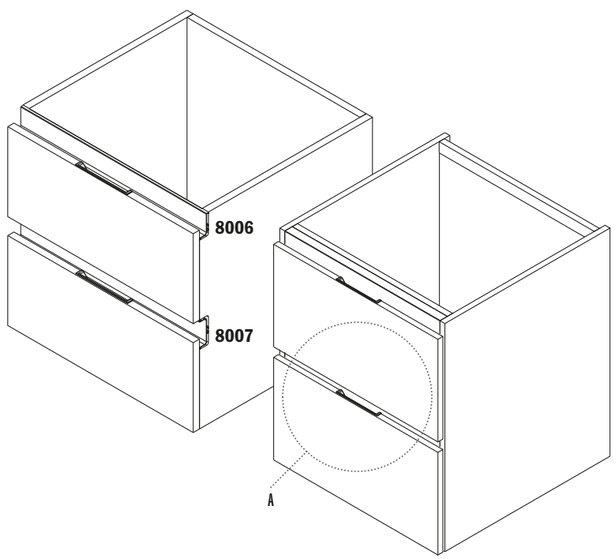

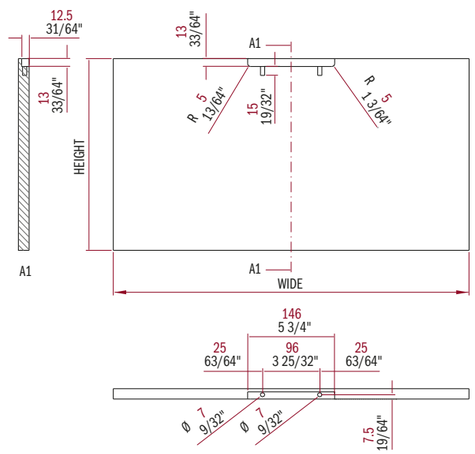

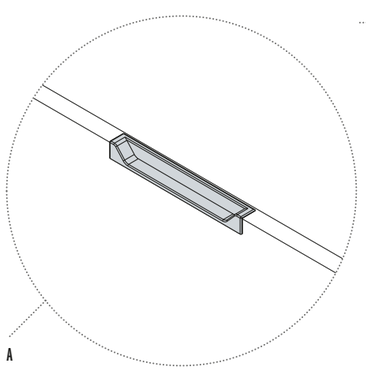

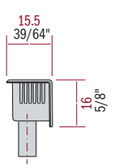

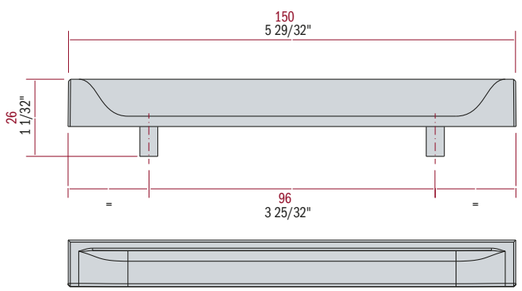

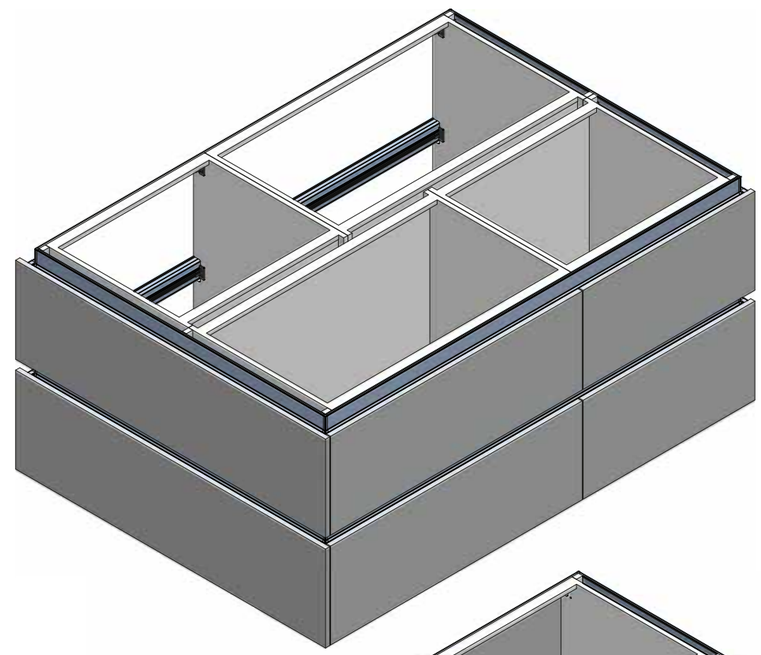

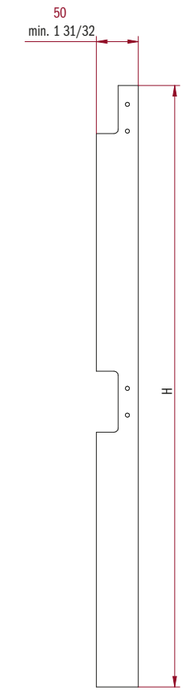

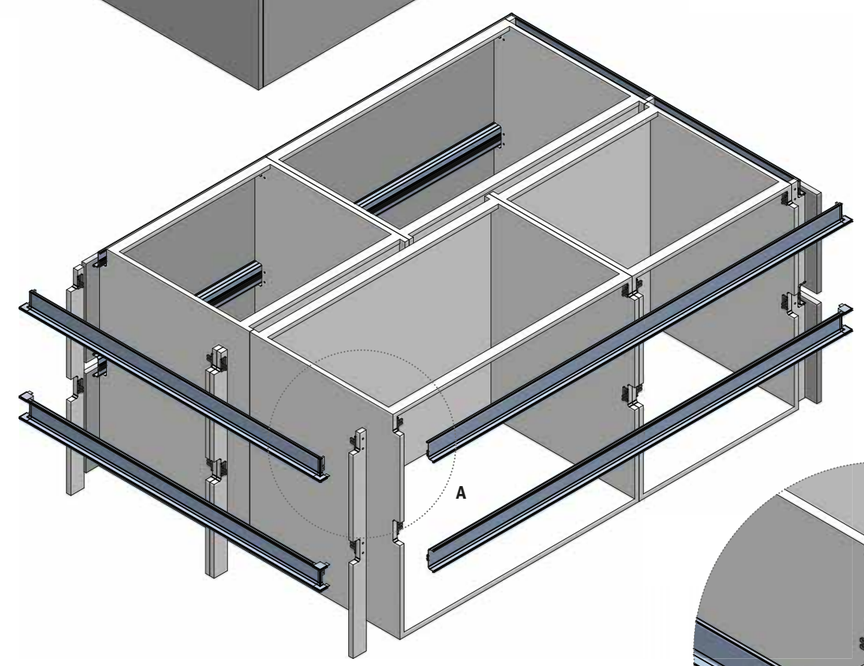

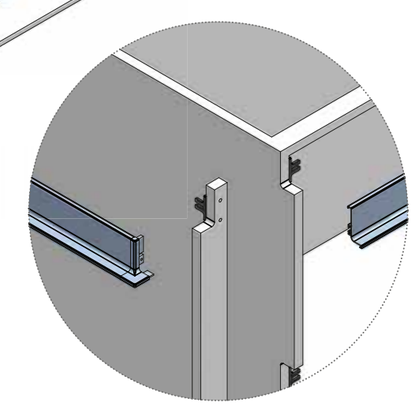

DETAIL A

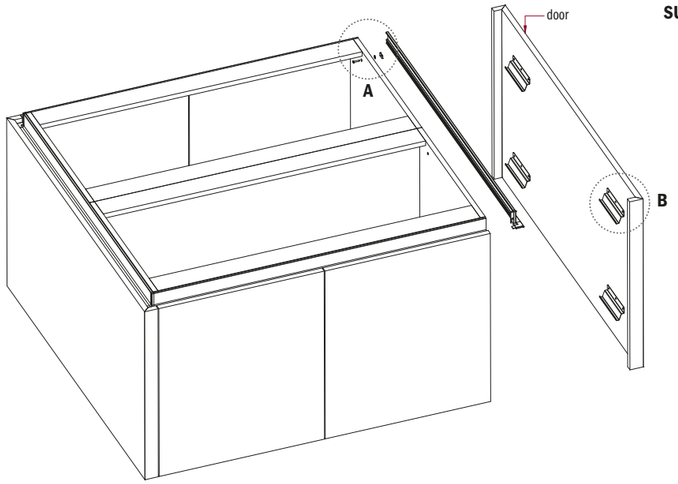

SUGGESTED GOLA FIXING METHODS

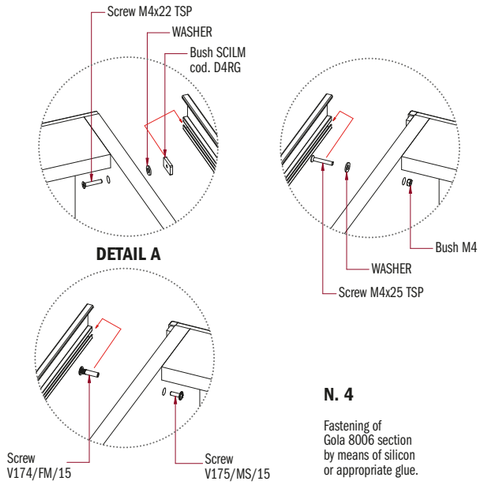

N. 4

Fastening of
Gola 8006 section
by means of silicon
or appropriate glue.

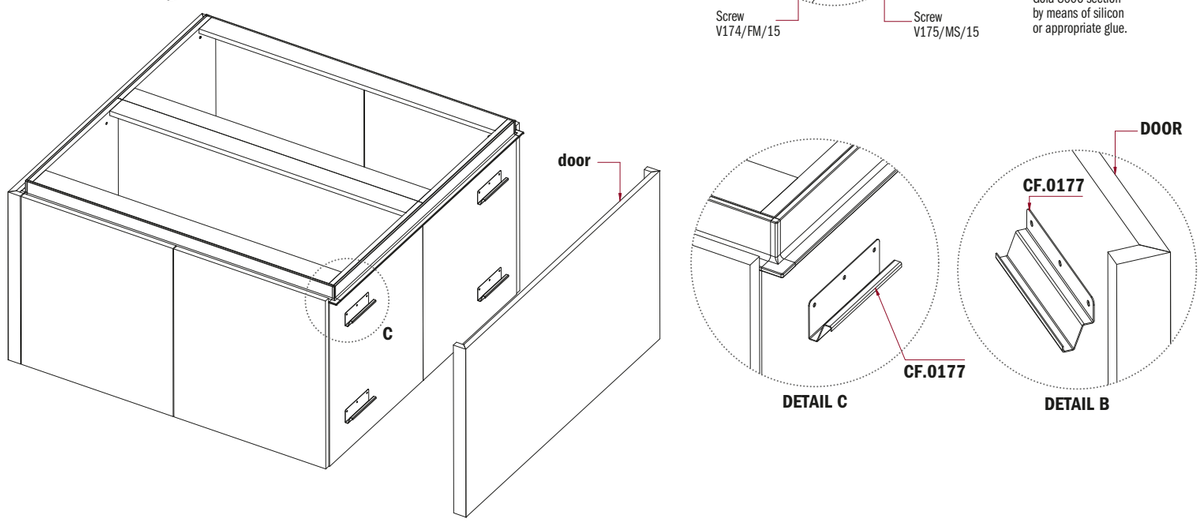

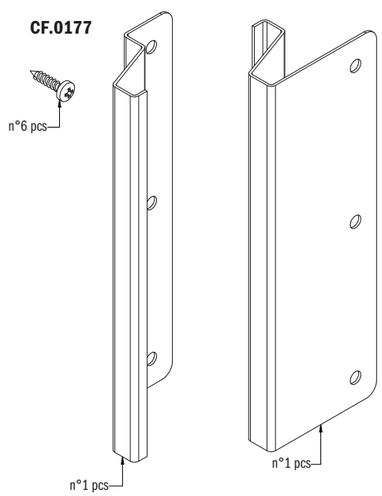

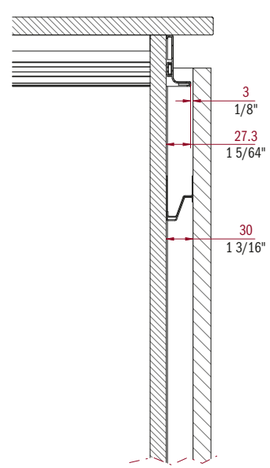

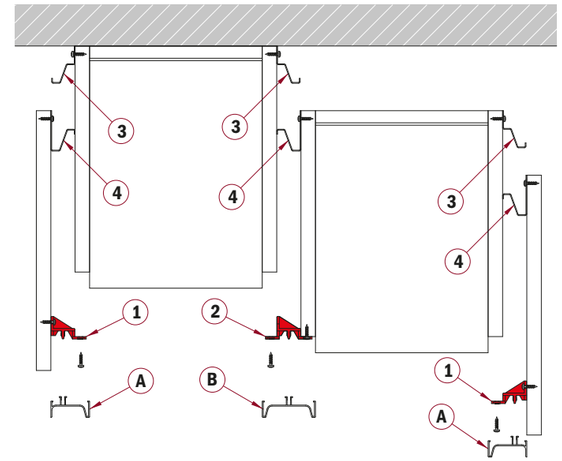

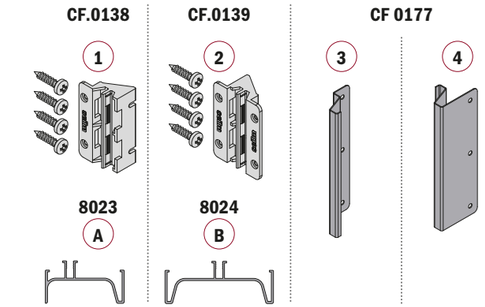

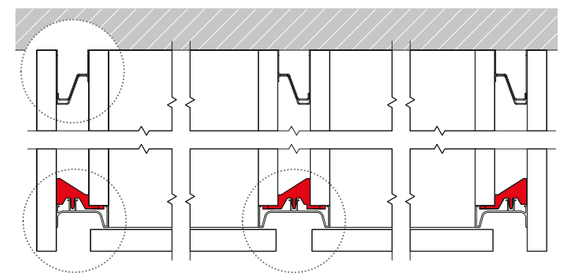

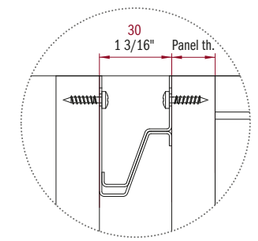

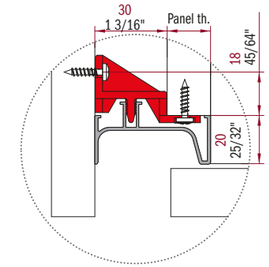

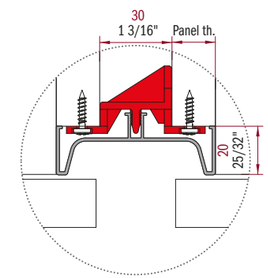

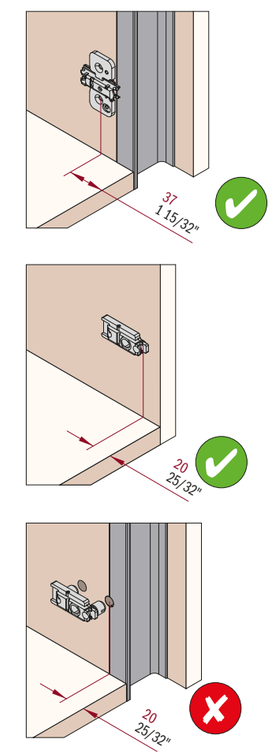

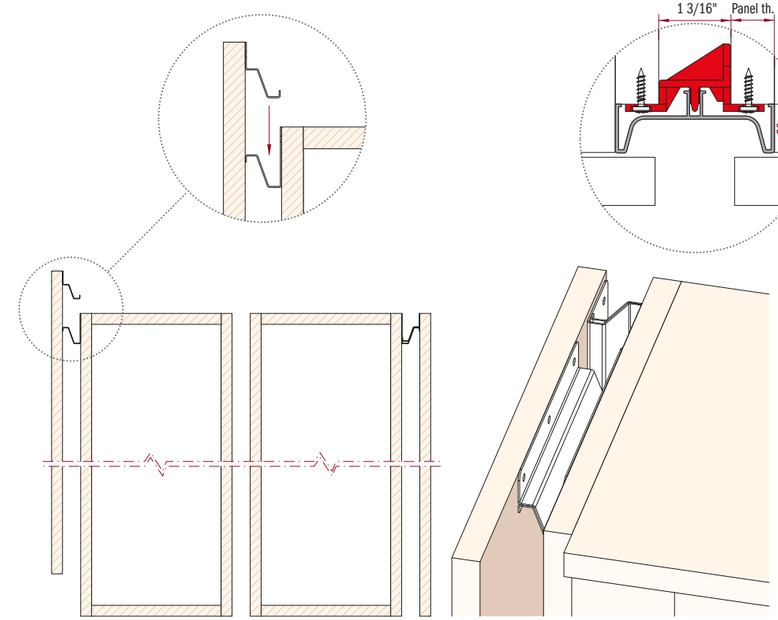

8024

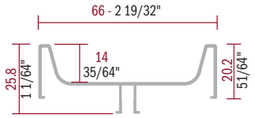

"GOLA" VERTICAL ALUMINUM SPACER CHANNEL PROFILE FOR CABINET
50S Aluminum Clear Anodize
S2I Aluminum Titanium Anodize
SB1 Aluminum Stainless Anodize
V01 Aluminum White Semi-Gloss Powder Coated
V12 Aluminum Black Matt Powder Coated
LU5 Aluminum Chrome Anodize
S2R Aluminum Copper Anodize
S2Q Aluminum Gold Anodize
Other Colors and Lengths Available FROM ITALY

"GOLA" PROFILÉ D'ESPACEMENT VERTICAL EN ALUMINIUM POUR ARMOIRE
50S Aluminium Clair Anodisé
S2I Aluminium Titanium Anodisé
SB1 Aluminium Inox Anodisé
V01 Aluminium Blanc Semi-Lustre Peint à Poudre
V12 Aluminium Noir Mat Peint à Poudre
LU5 Aluminium Chrome Anodisé
S2R Aluminium Cuivre Anodisé
S2Q Aluminium Or Anodisé
Autres Couleurs et Longueurs Disponibles DE L'ITALIE

PERFIL "GOLA" VERTICAL EN ALUMINIO PARA MUEBLE
50S Aluminio Anodizado Claro
S2I Aluminio Anodizado Titanio
SB1 Aluminio Anodizado Inox
V01 Aluminio Blanco Semi-Brillo Barnizado
V12 Aluminio Negro Mate Barnizado
LU5 Aluminio Anodizado Cromo
S2R Aluminio Anodizado Cobre
S2Q Aluminio Anodizado Oro
Otros Colores y Dimensiones Disonibles DE ITALIA

COLORS	ITEM NUMBER	LENGTH mm	LENGTH inch	PCS PER BOX	BOX DIMENSION mm W x D x H	BOX DIMENSION inch W x D x H	BOX WEIGHT KG	BOX WEIGHT LB	STOCK IN AMERICA MSRP PRICING USD METER	FOOT	EACH	BOX
50S	U802450SL27	2670	105 1/8"	5	2740 x 120 x 90	107 7/8" x 4 3/4" x 3 1/2"	9.00	19.84	30.976	9.441	82.706	413.530
S2I	U8024S2IL27	2670	105 1/8"	5	2740 x 120 x 90	107 7/8" x 4 3/4" x 3 1/2"	9.00	19.84	38.251	11.659	102.13	510.651
SB1	U8024SB1L27	2670	105 1/8"	5	2740 x 120 x 90	107 7/8" x 4 3/4" x 3 1/2"	9.00	19.84	40.415	12.318	107.908	539.540
V01	U8024V01L27	2670	105 1/8"	5	2740 x 120 x 90	107 7/8" x 4 3/4" x 3 1/2"	9.00	19.84	26.004	7.926	69.431	347.153
V12	U8024V12L27	2670	105 1/8"	5	2740 x 120 x 90	107 7/8" x 4 3/4" x 3 1/2"	9.00	19.84	33.737	10.283	90.078	450.389
									AVAILABLE FROM ITALY MSRP PRICING USD			
LU5	8024LU5L45	4500	177 3/16"	<<<<< MINIMUM ORDER AND PACKAGING TO BE CONFIRMED >>>>>					36.783	11.211	165.524	
S2R	8024S2RL45	4500	177 3/16"	<<<<< MINIMUM ORDER AND PACKAGING TO BE CONFIRMED >>>>>					34.852	10.623	156.834	
S2Q	8024S2QL45	4500	177 3/16"	<<<<< MINIMUM ORDER AND PACKAGING TO BE CONFIRMED >>>>>					33.674	10.264	151.533	

8023

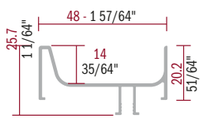

"GOLA" VERTICAL ALUMINUM SPACER CHANNEL PROFILE FOR CABINET
50S Aluminum Clear Anodize
S2I Aluminum Titanium Anodize
SB1 Aluminum Stainless Anodize
V01 Aluminum White Semi-Gloss Powder Coated
V12 Aluminum Black Matt Powder Coated
LU5 Aluminum Chrome Anodize
S2R Aluminum Copper Anodize
S2Q Aluminum Gold Anodize
Other Colors and Lengths Available FROM ITALY

"GOLA" PROFILÉ D'ESPACEMENT VERTICAL EN ALUMINIUM POUR ARMOIRE
50S Aluminium Clair Anodisé
S2I Aluminium Titanium Anodisé
SB1 Aluminium Inox Anodisé
V01 Aluminium Blanc Semi-Lustre Peint à Poudre
V12 Aluminium Noir Mat Peint à Poudre
LU5 Aluminium Chrome Anodisé
S2R Aluminium Cuivre Anodisé
S2Q Aluminium Or Anodisé
Autres Couleurs et Longueurs Disponibles DE L'ITALIE

PERFIL "GOLA" VERTICAL EN ALUMINIO PARA MUEBLE
50S Aluminio Anodizado Claro
S2I Aluminio Anodizado Titanio
SB1 Aluminio Anodizado Inox
V01 Aluminio Blanco Semi-Brillo Barnizado
V12 Aluminio Negro Mate Barnizado
LU5 Aluminio Anodizado Cromo
S2R Aluminio Anodizado Cobre
S2Q Aluminio Anodizado Oro
Otros Colores y Dimensiones Disponibles DE ITALIA

COLORS	ITEM NUMBER	LENGTH mm	LENGTH inch	PCS PER BOX	BOX DIMENSION mm W x D x H	BOX DIMENSION inch W x D x H	BOX WEIGHT KG	BOX WEIGHT LB	STOCK IN AMERICA MSRP PRICING USD METER	FOOT	EACH	BOX
50S	U802350SL27	2670	105 1/8"	5	2740 x 120 x 90	107 7/8" x 4 3/4" x 3 1/2"	7.50	16.53	27.54	8.394	73.532	367.659
S2I	U8023S2IL27	2670	105 1/8"	5	2740 x 120 x 90	107 7/8" x 4 3/4" x 3 1/2"	7.50	16.53	35.113	10.702	93.752	468.759
SB1	U8023SB1L27	2670	105 1/8"	5	2740 x 120 x 90	107 7/8" x 4 3/4" x 3 1/2"	7.50	16.53	38.175	11.636	101.927	509.636
V01	U8023V01L27	2670	105 1/8"	5	2740 x 120 x 90	107 7/8" x 4 3/4" x 3 1/2"	7.50	16.53	23.792	7.252	63.525	317.623
V12	U8023V12L27	2670	105 1/8"	5	2740 x 120 x 90	107 7/8" x 4 3/4" x 3 1/2"	7.50	16.53	28.561	8.705	76.258	381.289
									AVAILABLE FROM ITALY MSRP PRICING USD			
LU5	8023LU5L45	4500	177 3/16"	<<<<< MINIMUM ORDER AND PACKAGING TO BE CONFIRMED >>>>>					30.006	9.146	135.027	
S2R	8023S2RL45	4500	177 3/16"	<<<<< MINIMUM ORDER AND PACKAGING TO BE CONFIRMED >>>>>					30.464	9.285	137.088	
S2Q	8023S2QL45	4500	177 3/16"	<<<<< MINIMUM ORDER AND PACKAGING TO BE CONFIRMED >>>>>					26.468	8.067	119.106	

CF.0139

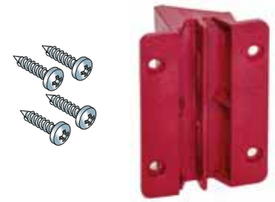

KIT OF BRACKETS FOR GOLA PROFILE 8024
1 kit includes 1 bracket + 4 screws

KIT DE FIXATION POUR GOLA VERTICAL 8024
1 ensemble: 1 support + 6 vis de fixation

KIT SOPORTE PARA GOLA 8024
1 set : 1 soporte + 4 tornillos

ITEM NUMBER	KIT PER BOX	BOX DIMENSION mm W x D x H	BOX DIMENSION inch W x D x H	BOX WEIGHT KG	BOX WEIGHT LB	STOCK IN AMERICA MSRP PRICING USD KIT	BOX
UCF.0139SF	25	220 x 165 x 140	8 5/8" x 6 1/2" x 5 1/2"	1.00	2.20	3.113	77.825

CF.0138

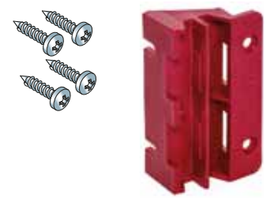

KIT OF BRACKETS FOR GOLA PROFILE 8023
1 kit includes 1 bracket + 4 screws

KIT DE FIXATION POUR GOLA VERTICAL 8023
1 ensemble: 1 support + 4 vis de fixation

KIT SOPORTE PARA GOLA 8023
1 set : 1 soporte + 4 tornillos

ITEM NUMBER	KIT PER BOX	BOX DIMENSION mm W x D x H	BOX DIMENSION inch W x D x H	BOX WEIGHT KG	BOX WEIGHT LB	STOCK IN AMERICA MSRP PRICING USD KIT	BOX
UCF.0138SF	25	220 x 165 x 140	8 5/8" x 6 1/2" x 5 1/2"	1.00	2.20	3.113	77.825

CF.0177

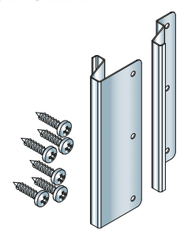

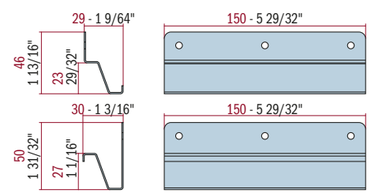

SPACER BRACKETS
FOR VERTICAL GOLA
1 Kit includes R & L Brackets + 6 Screws

SUPPORT DE ESPACEMENT
POUR GOLA VERTICAL
1 Ensemble contient Supports D & G + 6 Vis de Fixation

SOPORTE ESPACIADOR
Set 1+1 D&I Soporte + 6 tornillos de Fijación

ITEM NUMBER	KIT PER BOX	BOX DIMENSION mm W x D x H	BOX DIMENSION inch W x D x H	BOX WEIGHT KG	BOX WEIGHT LB	STOCK IN AMERICA MSRP PRICING USD KIT	BOX
UCF.0177	25	215 x 160 x 130	8 1/2" x 6 1/4" x 5 1/8"	6.50	14.33	6.205	155.125

8111

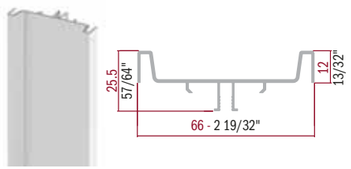

"GOLA" VERTICAL ALUMINUM SPACER CHANNEL PROFILE FOR CABINET
50S Aluminum Clear Anodize
S2I Aluminum Titanium Anodize
SB1 Aluminum Stainless Anodize
V01 Aluminum White Semi-Gloss Powder Coated
V12 Aluminum Black Matt Powder Coated
Other Colors and Lengths Available FROM ITALY

"GOLA" PROFILÉ D'ESPACEMENT VERTICAL EN ALUMINIUM POUR ARMOIRE
50S Aluminium Clair Anodisé
S2I Aluminium Titanium Anodisé
SB1 Aluminium Inox Anodisé
V01 Aluminium Blanc Semi-Lustre Peint à Poudre
V12 Aluminium Noir Mat Peint à Poudre
Autres Couleurs et Longueurs Disponibles DE L'ITALIE

PERFIL "GOLA" VERTICAL EN ALUMINIO PARA MUEBLE
50S Aluminio Anodizado Claro
S2I Aluminio Anodizado Titanio
SB1 Aluminio Anodizado Inox
V01 Aluminio Blanco Semi-Brillo Barnizado
V12 Aluminio Negro Mate Barnizado
Otros Colores y Dimensiones Disonibles DE ITALIA

COLORS	ITEM NUMBER	LENGTH		PCS PER BOX	BOX DIMENSION mm	BOX DIMENSION inch	BOX WEIGHT		STOCK IN AMERICA MSRP PRICING USD			
		mm	inch		W x D x H	W x D x H	KG	LB	METER	FOOT	EACH	BOX
50S	U811150SL27	2670	105 1/8"	5	2720 x 145 x 44	107 1/8" x 5 3/4" x 1 3/4"	7.30	16.09	27.453	8.368	73.300	366.498
S2I	U8111S2IL27	2670	105 1/8"	5	2720 x 145 x 44	107 1/8" x 5 3/4" x 1 3/4"	7.30	16.09	36.205	11.035	96.667	483.337
SB1	U8111SB1L27	2670	105 1/8"	5	2720 x 145 x 44	107 1/8" x 5 3/4" x 1 3/4"	7.30	16.09	38.254	11.660	102.138	510.691
V01	U8111V01L27	2670	105 1/8"	5	2720 x 145 x 44	107 1/8" x 5 3/4" x 1 3/4"	7.30	16.09	27.821	8.480	74.282	371.410
V12	U8111V12L27	2670	105 1/8"	5	2720 x 145 x 44	107 1/8" x 5 3/4" x 1 3/4"	7.30	16.09	28.278	8.619	75.502	377.511

8110

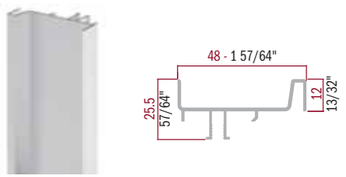

"GOLA" VERTICAL ALUMINUM SPACER CHANNEL PROFILE FOR CABINET
50S Aluminum Clear Anodize
S2I Aluminum Titanium Anodize
SB1 Aluminum Stainless Anodize
V01 Aluminum White Semi-Gloss Powder Coated
V12 Aluminum Black Matt Powder Coated
Other Colors and Lengths Available FROM ITALY

"GOLA" PROFILÉ D'ESPACEMENT VERTICAL EN ALUMINIUM POUR ARMOIRE
50S Aluminium Clair Anodisé
S2I Aluminium Titanium Anodisé
SB1 Aluminium Inox Anodisé
V01 Aluminium Blanc Semi-Lustre Peint à Poudre
V12 Aluminium Noir Mat Peint à Poudre
Autres Couleurs et Longueurs Disponibles DE L'ITALIE

PERFIL "GOLA" VERTICAL EN ALUMINIO PARA MUEBLE
50S Aluminio Anodizado Claro
S2I Aluminio Anodizado Titanio
SB1 Aluminio Anodizado Inox
V01 Aluminio Blanco Semi-Brillo Barnizado
V12 Aluminio Negro Mate Barnizado
Otros Colores y Dimensiones Disonibles DE ITALIA

COLORS	ITEM NUMBER	LENGTH		PCS PER BOX	BOX DIMENSION mm	BOX DIMENSION inch	BOX WEIGHT		STOCK IN AMERICA MSRP PRICING USD			
		mm	inch		W x D x H	W x D x H	KG	LB	METER	FOOT	EACH	BOX
50S	U811050SL27	2670	105 1/8"	5	2720 x 145 x 44	107 1/8" x 5 3/4" x 1 3/4"	6.00	13.23	26.131	7.965	69.770	348.849
S2I	U8110S2IL27	2670	105 1/8"	5	2720 x 145 x 44	107 1/8" x 5 3/4" x 1 3/4"	6.00	13.23	34.445	10.499	91.968	459.841
SB1	U8110SB1L27	2670	105 1/8"	5	2720 x 145 x 44	107 1/8" x 5 3/4" x 1 3/4"	6.00	13.23	36.392	11.092	97.167	485.833
V01	U8110V01L27	2670	105 1/8"	5	2720 x 145 x 44	107 1/8" x 5 3/4" x 1 3/4"	6.00	13.23	26.481	8.071	70.704	353.521
V12	U8110V12L27	2670	105 1/8"	5	2720 x 145 x 44	107 1/8" x 5 3/4" x 1 3/4"	6.00	13.23	26.915	8.204	71.863	359.315

CF.0190

KIT OF BRACKETS
FOR GOLA PROFILE 8111 - 8110
1 kit includes 1 bracket + 4 screws

KIT DE FIXATION
POUR GOLA VERTICAL 8111 - 8110
1 ensemble: 1 support + 6 vis de fixation

KIT SOPORTE PARA GOLA 8111 - 8110
1 set : 1 soporte + 4 tornillos

ITEM NUMBER	KIT PER BOX	BOX DIMENSION mm	BOX DIMENSION inch	BOX WEIGHT		STOCK IN AMERICA MSRP PRICING USD	
		W x D x H	W x D x H	KG	LB	KIT	BOX
UCF.0190SF	25	220 x 190 x 160	8 5/8" x 7 1/2" x 6 1/4"	0.85	1.87	2.743	68.575

CF.0177

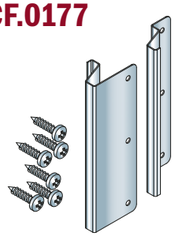

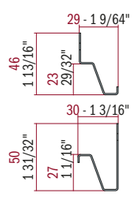

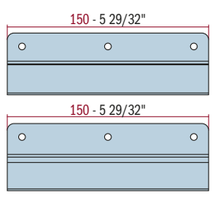

SPACER BRACKETS
FOR VERTICAL GOLA
1 Kit includes R & L Brackets + 6 Screws

SUPPORT DE ESPACEMENT
POUR GOLA VERTICAL
1 Ensemble contient Supports D & G + 6 Vis de Fixation

SOPORTE ESPACIADOR
Set 1+1 D&I Soporte + 6 tornillos de Fijación

ITEM NUMBER	KIT PER BOX	BOX DIMENSION mm	BOX DIMENSION inch	BOX WEIGHT		STOCK IN AMERICA MSRP PRICING USD	
		W x D x H	W x D x H	KG	LB	KIT	BOX
UCF.0177	25	215 x 160 x 130	8 1/2" x 6 1/4" x 5 1/8"	6.50	14.33	6.205	155.125

8110-8011

SNAP ON 2 PROFILES WITH DECOR SIDES

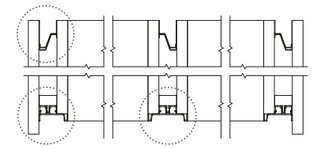

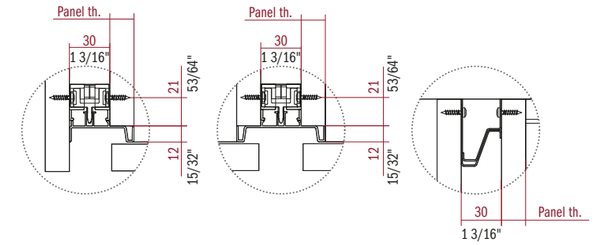

NOTE:
Grip profiles snap onto special brackets
No intenal screws
Fast and easy assembly

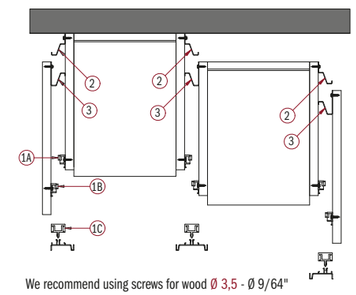

We recommend using screws for wood Ø 3,5 - Ø 9/64"

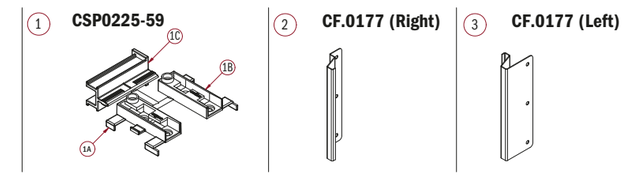

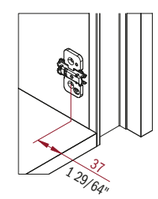

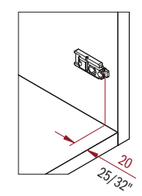

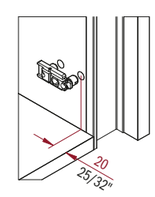

MOUTING SYSTEM SNAP ON 2

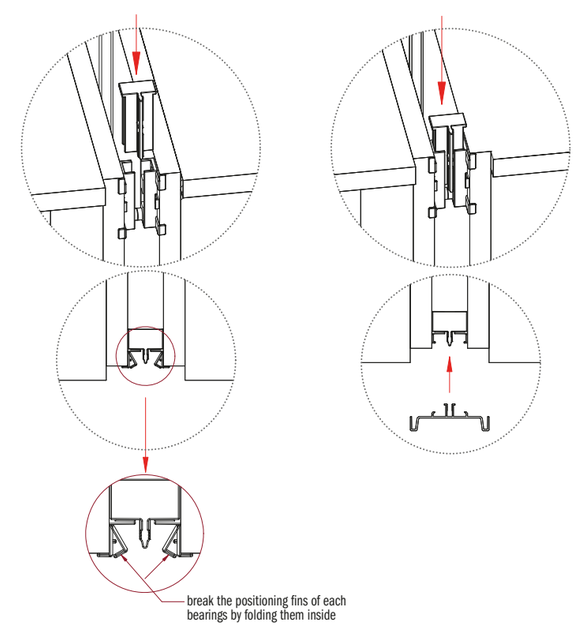

VERTICAL L & C SHAPE "GOLA" PROFILES

Technical Specifications...
- Material: Aluminum
- Performance: Aluminum extrusion with high quality anodized finishes
- Environment: 100% recyclable materials

Spécifications Techniques...
- *Matériel: Aluminium*
- *Performance: Extrusion d'aluminium avec finitions anodisées de haute qualité*
- *Environnement: Matériaux 100% recyclables*

Especificaciones Técnicas...
- Material: Aluminio
- Rendimiento: Extrusión de aluminio con acabados anodizado de alta calidad
- Medio Ambiente: Materiales 100% reciclables

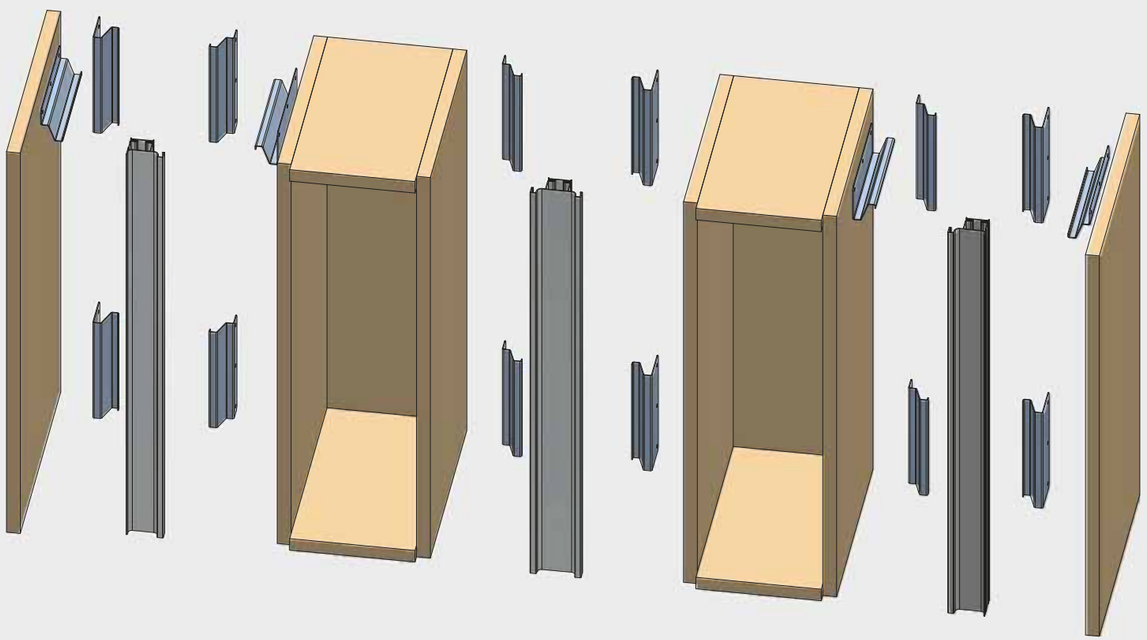

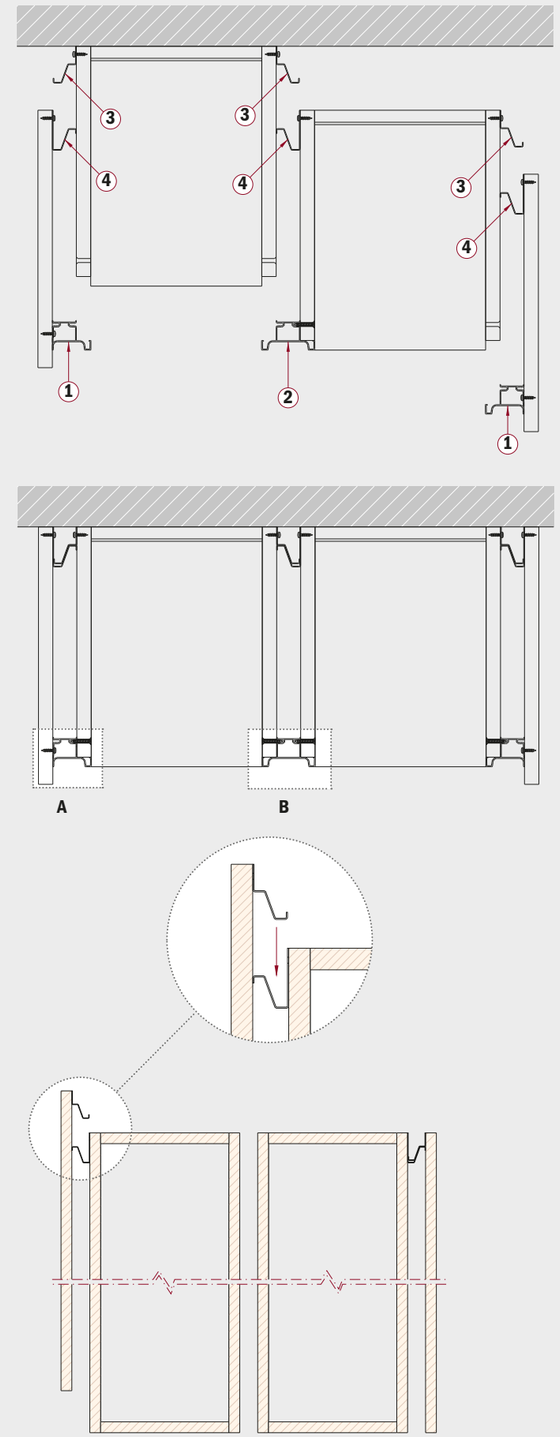

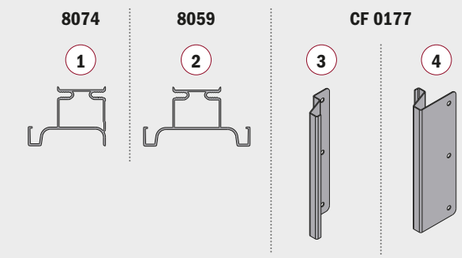

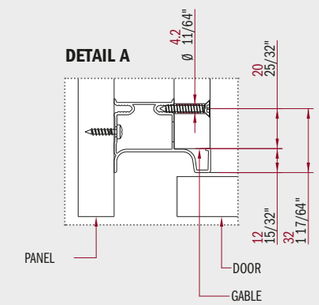

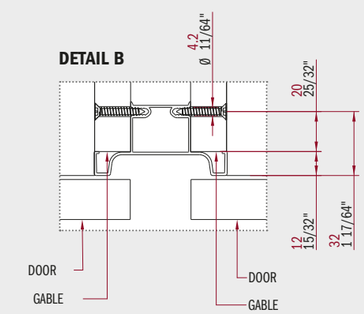

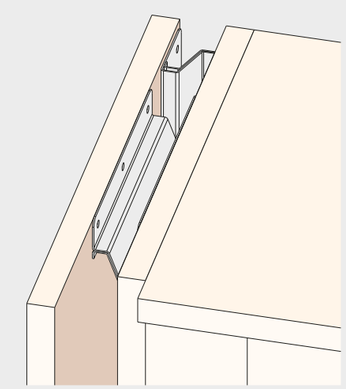

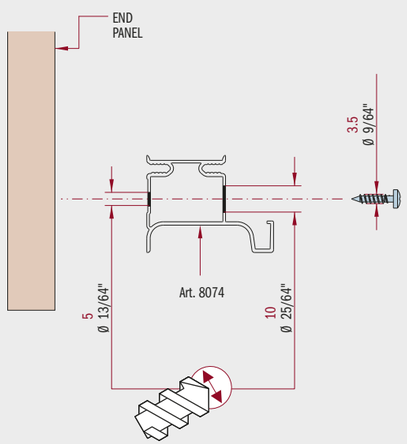

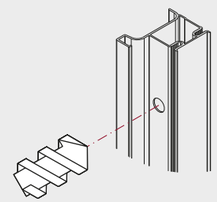

STEP 1

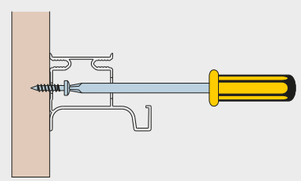

STEP 2

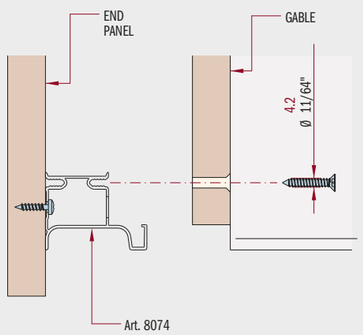

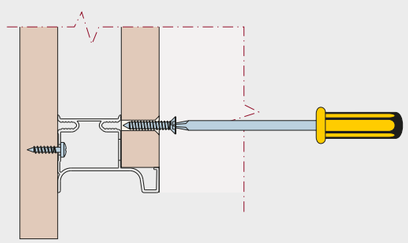

STEP 3

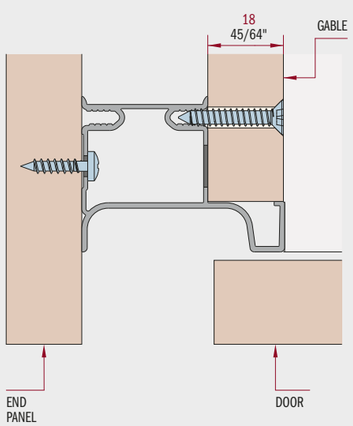

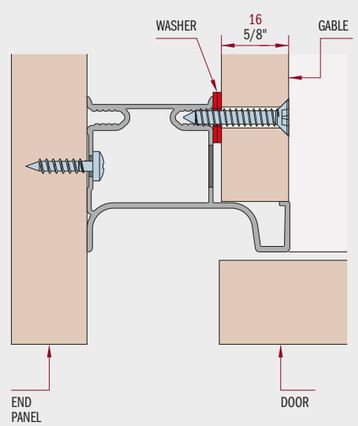

For 16mm - 5/8" gables, use a 2mm - 5/64" spacer between the Gable and the Gola profile

Pour les côtés de 16mm - 5/8", utilisez un espaceur de 2mm - 5/64" entre le côté et le profilé Gola

Para los costados de 16mm - 5/8", use un grosor de 2mm - 5/64" entre el costado y el perfil Gola

8059

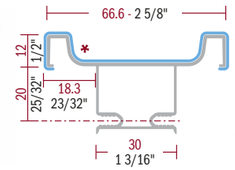

"GOLA" VERTICAL ALUMINUM SPACER CHANNEL PROFILE FOR CABINET
50S Aluminum Clear Anodize
S2I Aluminum Titanium Anodize
SB1 Aluminum Stainless Anodize
V01 Aluminum White Semi-Gloss Powder Coated
V12 Aluminum Black Matt Powder Coated
LU5 Aluminum Chrome Anodize
S2R Aluminum Copper Anodize
S2Q Aluminum Gold Anodize
Other Colors and Lengths Available FROM ITALY

"GOLA" PROFILÉ D'ESPACEMENT VERTICAL EN ALUMINIUM POUR ARMOIRE
50S Aluminium Clair Anodisé
S2I Aluminium Titanium Anodisé
SB1 Aluminium Inox Anodisé
V01 Aluminium Blanc Semi-Lustre Peint à Poudre
V12 Aluminium Noir Mat Peint à Poudre
LU5 Aluminium Chrome Anodisé
S2R Aluminium Cuivre Anodisé
S2Q Aluminium Or Anodisé
Autres Couleurs et Longueurs Disponibles DE L'ITALIE

PERFIL "GOLA" VERTICAL EN ALUMINIO PARA MUEBLE
50S Aluminio Anodizado Claro
S2I Aluminio Anodizado Titanio
SB1 Aluminio Anodizado Inox
V01 Aluminio Blanco Semi-Brillo Barnizado
V12 Aluminio Negro Mate Barnizado
LU5 Aluminio Anodizado Cromo
S2R Aluminio Anodizado Cobre
S2Q Aluminio Anodizado Or
Otros Colores y Dimensiones Disonibles DE ITALIA

COLORS	ITEM NUMBER	LENGTH mm	LENGTH inch	PCS PER BOX	BOX DIMENSION mm W x D x H	BOX DIMENSION inch W x D x H	BOX WEIGHT KG	BOX WEIGHT LB	STOCK IN AMERICA MSRP PRICING USD METER	FOOT	EACH	BOX
50S	U805950SL27	2670	105 1/8"	5	2740 x 215 x 95	107 7/8" x 8 1/2" x 3 3/4"	11.20	24.69	30.460	9.284	81.328	406.641
S2I	U8059S2IL27	2670	105 1/8"	5	2740 x 215 x 95	107 7/8" x 8 1/2" x 3 3/4"	11.20	24.69	41.772	12.732	111.531	557.656
SB1	U8059SB1L27	2670	105 1/8"	5	2740 x 215 x 95	107 7/8" x 8 1/2" x 3 3/4"	11.20	24.69	52.624	16.040	140.506	702.530
V01	U8059V01L27	2670	105 1/8"	5	2740 x 215 x 95	107 7/8" x 8 1/2" x 3 3/4"	11.20	24.69	28.537	8.698	76.194	380.969
V12	U8059V12L27	2670	105 1/8"	5	2740 x 215 x 95	107 7/8" x 8 1/2" x 3 3/4"	11.20	24.69	31.240	9.522	83.411	417.054
									AVAILABLE FROM ITALY MSRP PRICING USD			
LU5	8059LU5L45	4500	177 3/16"		<<<<< MINIMUM ORDER AND PACKAGING TO BE CONFIRMED >>>>>				33.831	10.312	152.240	
S2R	8059S2RL45	4500	177 3/16"		<<<<< MINIMUM ORDER AND PACKAGING TO BE CONFIRMED >>>>>				38.419	11.71	172.886	
S2Q	8059S2QL45	4500	177 3/16"		<<<<< MINIMUM ORDER AND PACKAGING TO BE CONFIRMED >>>>>				35.489	10.817	159.701	

8074

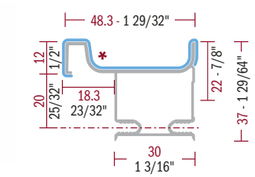

"GOLA" VERTICAL ALUMINUM SPACER CHANNEL PROFILE FOR CABINET
50S Aluminum Clear Anodize
S2I Aluminum Titanium Anodize
SB1 Aluminum Stainless Anodize
V01 Aluminum White Semi-Gloss Powder Coated
V12 Aluminum Black Matt Powder Coated
LU5 Aluminum Chrome Anodize
S2R Aluminum Copper Anodize
S2Q Aluminum Gold Anodize
Other Colors and Lengths Available FROM ITALY

"GOLA" PROFILÉ D'ESPACEMENT VERTICAL EN ALUMINIUM POUR ARMOIRE
50S Aluminium Clair Anodisé
S2I Aluminium Titanium Anodisé
SB1 Aluminium Inox Anodisé
V01 Aluminium Blanc Semi-Lustre Peint à Poudre
V12 Aluminium Noir Mat Peint à Poudre
LU5 Aluminium Chrome Anodisé
S2R Aluminium Cuivre Anodisé
S2Q Aluminium Or Anodisé
Autres Couleurs et Longueurs Disponibles DE L'ITALIE

PERFIL "GOLA" VERTICAL EN ALUMINIO PARA MUEBLE
50S Aluminio Anodizado Claro
S2I Aluminio Anodizado Titanio
SB1 Aluminio Anodizado Inox
V01 Aluminio Blanco Semi-Brillo Barnizado
V12 Aluminio Negro Mate Barnizado
LU5 Aluminio Anodizado Cromo
S2R Aluminio Anodizado Cobre
S2Q Aluminio Anodizado Or
Otros Colores y Dimensiones Disonibles DE ITALIA

COLORS	ITEM NUMBER	LENGTH mm	LENGTH inch	PCS PER BOX	BOX DIMENSION mm W x D x H	BOX DIMENSION inch W x D x H	BOX WEIGHT KG	BOX WEIGHT LB	STOCK IN AMERICA MSRP PRICING USD METER	FOOT	EACH	BOX
50S	U807450SL27	2670	105 1/8"	5	2740 x 150 x 95	107 7/8" x 5 7/8" x 3 3/4"	9.50	20.94	27.626	8.420	73.761	368.807
S2I	U8074S2IL27	2670	105 1/8"	5	2740 x 150 x 95	107 7/8" x 5 7/8" x 3 3/4"	9.50	20.94	39.005	11.889	104.143	520.717
SB1	U8074SB1L27	2670	105 1/8"	5	2740 x 150 x 95	107 7/8" x 5 7/8" x 3 3/4"	9.50	20.94	44.878	13.679	119.824	599.121
V01	U8074V01L27	2670	105 1/8"	5	2740 x 150 x 95	107 7/8" x 5 7/8" x 3 3/4"	9.50	20.94	27.635	8.423	73.785	368.927
V12	U8074V12L27	2670	105 1/8"	5	2740 x 150 x 95	107 7/8" x 5 7/8" x 3 3/4"	9.50	20.94	28.206	8.597	75.310	376.550
									AVAILABLE FROM ITALY MSRP PRICING USD			
LU5	8074LU5L45	4500	177 3/16"		<<<<< MINIMUM ORDER AND PACKAGING TO BE CONFIRMED >>>>>				28.519	8.693	128.336	
S2R	8074S2RL45	4500	177 3/16"		<<<<< MINIMUM ORDER AND PACKAGING TO BE CONFIRMED >>>>>				33.883	10.328	152.474	
S2Q	8074S2QL45	4500	177 3/16"		<<<<< MINIMUM ORDER AND PACKAGING TO BE CONFIRMED >>>>>				33.2	10.119	149.400	

CF.0177

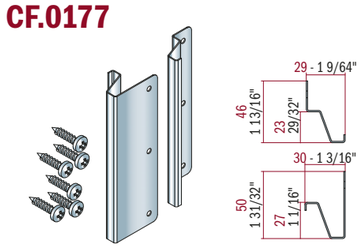

SPACER BRACKETS
FOR VERTICAL GOLA
1 Kit includes R & L Brackets + 6 Screws

SUPPORT DE ESPACEMENT POUR GOLA VERTICAL
1 Ensemble contient Supports D & G + 6 Vis de Fixation

SOPORTE ESPACIADOR
Set 1+1 D&I Soporte + 6 tornillos de Fijación

ITEM NUMBER	KIT PER BOX	BOX DIMENSION mm W x D x H	BOX DIMENSION inch W x D x H	BOX WEIGHT KG	BOX WEIGHT LB	STOCK IN AMERICA MSRP PRICING USD KIT	BOX
UCF.0177	25	215 x 160 x 130	8 1/2" x 6 1/4" x 5 1/8"	6.50	14.33	6.205	155.125

GOLA PROFILE FOR UPPER CABINET

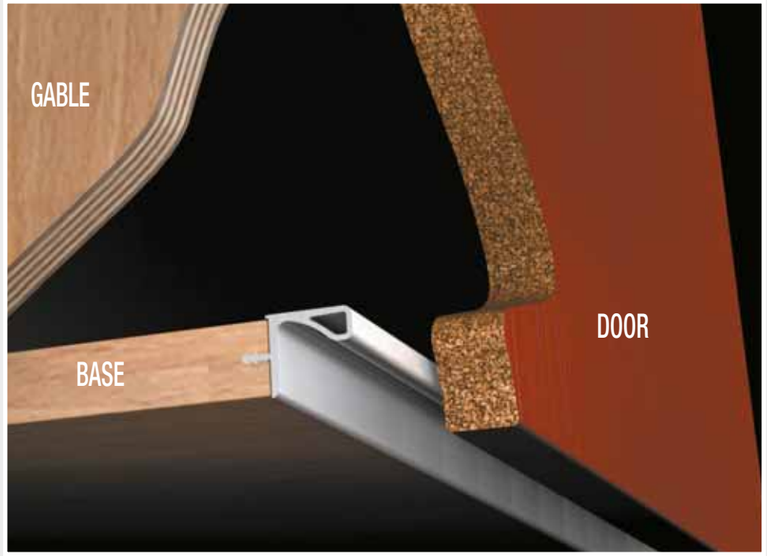

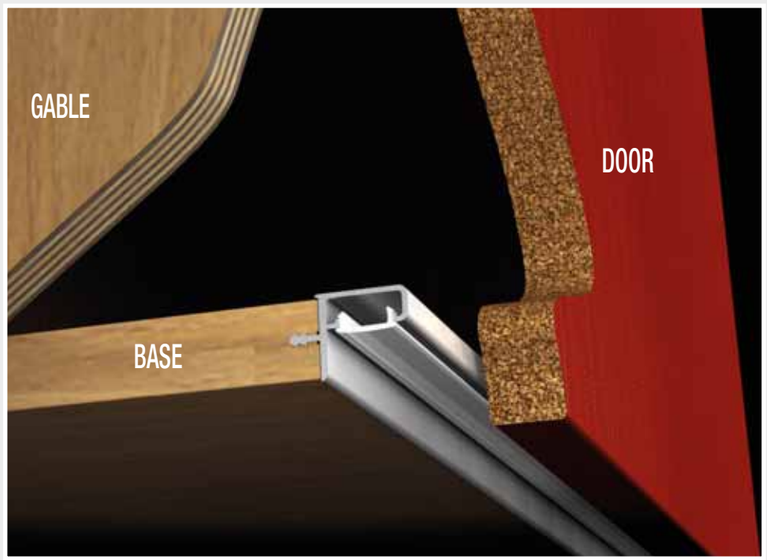

1730

"GOLA" HORIZONTAL ALUMINUM SPACER CHANNEL PROFILE FOR UPPER CABINET
50S Aluminum Clear Anodize
Other Colors and Lengths Available FROM ITALY

"GOLA" PROFILÉ D'ESPACEMENT HORIZONTALE EN ALUMINIUM POUR ARMOIRE DU HAUT
50S Aluminium Clair Anodisé
Autres Couleurs et Longueurs Disponibles DE L'ITALIE

PERFIL GOLA HORIZONTAL SUPERIOR EN ALUMINIO PARA MUEBLE ALTO
50S Aluminio Anodizado Claro
Otras Colores y Terminaciones Disponibles DE ITALIA

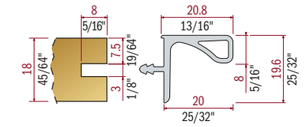

COLORS	ITEM NUMBER		LENGTH	PCS PER BOX	BOX DIMENSION mm W x D x H	BOX DIMENSION inch W x D x H	BOX WEIGHT KG	BOX WEIGHT LB	STOCK IN AMERICA MSRP PRICING USD METER	FOOT	EACH	BOX
50S	U173050SL27	2670	105 1/8"	10	2740 x 95 x 65	107 7/8" x 3 3/4" x 2 1/2"	7.50	16.53	14.482	4.414	38.667	386.669
50S	U173050SL39	3900	153 9/16"	10	3950 x 95 x 65	155 1/2" x 3 3/4" x 2 1/2"	12.50	27.56	13.713	4.180	53.481	534.807
V12	U1730V12L27	2670	105 1/8 "	10	2740 x 95 x 65	107 7/8" x 3 3/4" x 2 1/2"	7.50	16.53	16.353	4.984	43.663	436.625

1746

"GOLA" HORIZONTAL ALUMINUM SPACER CHANNEL PROFILE FOR UPPER CABINET
50S Aluminum Clear Anodize
Other Colors and Lengths Available FROM ITALY

"GOLA" PROFILÉ D'ESPACEMENT HORIZONTALE EN ALUMINIUM POUR ARMOIRE DU HAUT
50S Aluminium Clair Anodisé
Autres Couleurs et Longueurs Disponibles DE L'ITALIE

PERFIL GOLA HORIZONTAL SUPERIOR EN ALUMINIO PARA MUEBLE ALTO
50S Aluminio Anodizado Claro
Otras Colores y Terminaciones Disponibles DE ITALIA

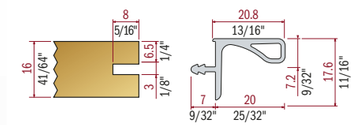

COLORS	ITEM NUMBER		LENGTH	PCS PER BOX	BOX DIMENSION mm W x D x H	BOX DIMENSION inch W x D x H	BOX WEIGHT KG	BOX WEIGHT LB	STOCK IN AMERICA MSRP PRICING USD METER	FOOT	EACH	BOX
50S	U174650SL27	2670	105 1/8"	10	2740 x 145 x 45	107 7/8" x 5 3/4" x 1 3/4"	7.50	16.53	14.482	4.414	38.667	386.669
50S	U174650SL39	3900	153 9/16"	10	3950 x 145 x 45	155 1/2" x 5 3/4" x 1 3/4"	10.43	22.99	13.713	4.180	53.481	534.807
V12	U1746V12L27	2670	105 1/8 "	10	2740 x 95 x 65	107 7/8" x 3 3/4" x 2 1/2"	7.50	16.53	16.353	4.984	43.663	436.625

1759

"GOLA" HORIZONTAL ALUMINUM SPACER CHANNEL PROFILE FOR UPPER CABINET
50S Aluminum Clear Anodize
Other Colors and Lengths Available FROM ITALY

"GOLA" PROFILÉ D'ESPACEMENT HORIZONTALE EN ALUMINIUM POUR ARMOIRE DU HAUT
50S Aluminium Clair Anodisé
Autres Couleurs et Longueurs Disponibles DE L'ITALIE

ALUMINIO PARA MUEBLE ALTO
50S Aluminio Anodizado Claro
Otras Colores y Terminaciones Disponibles DE ITALIA

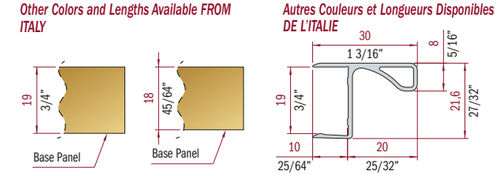

COLORS	ITEM NUMBER		LENGTH	PCS PER BOX	BOX DIMENSION mm W x D x H	BOX DIMENSION inch W x D x H	BOX WEIGHT KG	BOX WEIGHT LB	STOCK IN AMERICA MSRP PRICING USD METER	FOOT	EACH	BOX
50S	U175950SL27	2670	105 1/8"	10	2740 x 95 x 65	107 7/8" x 3 3/4" x 2 1/2"	7.50	16.53	17.434	5.314	46.549	465.488
50S	U175950SL41	4100	161 7/16"	10	4150 x 95 x 65	163 3/8" x 3 3/4" x 2 1/2"	11.50	25.35	17.125	5.220	70.213	702.125

1761

"GOLA" HORIZONTAL ALUMINUM SPACER CHANNEL PROFILE FOR UPPER CABINET
50S Aluminum Clear Anodize
Other Colors and Lengths Available FROM ITALY

"GOLA" PROFILÉ D'ESPACEMENT HORIZONTALE EN ALUMINIUM POUR ARMOIRE DU HAUT
50S Aluminium Clair Anodisé
Autres Couleurs et Longueurs Disponibles DE L'ITALIE

ALUMINIO PARA MUEBLE ALTO
50S Aluminio Anodizado Claro
Otras Colores y Terminaciones Disponibles DE ITALIA

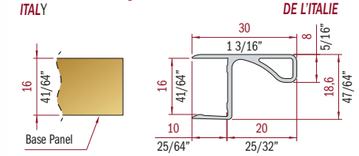

COLORS	ITEM NUMBER		LENGTH	PCS PER BOX	BOX DIMENSION mm W x D x H	BOX DIMENSION inch W x D x H	BOX WEIGHT KG	BOX WEIGHT LB	STOCK IN AMERICA MSRP PRICING USD METER	FOOT	EACH	BOX
50S	U176150SL27	2670	105 1/8"	10	2740 x 95 x 65	107 7/8" x 3 3/4" x 2 1/2"	7.50	16.53	17.434	5.314	46.549	465.488
50S	U176150SL41	4100	161 7/16"	10	4150 x 95 x 65	163 3/8" x 3 3/4" x 2 1/2"	11.50	25.35	17.125	5.220	70.213	702.125

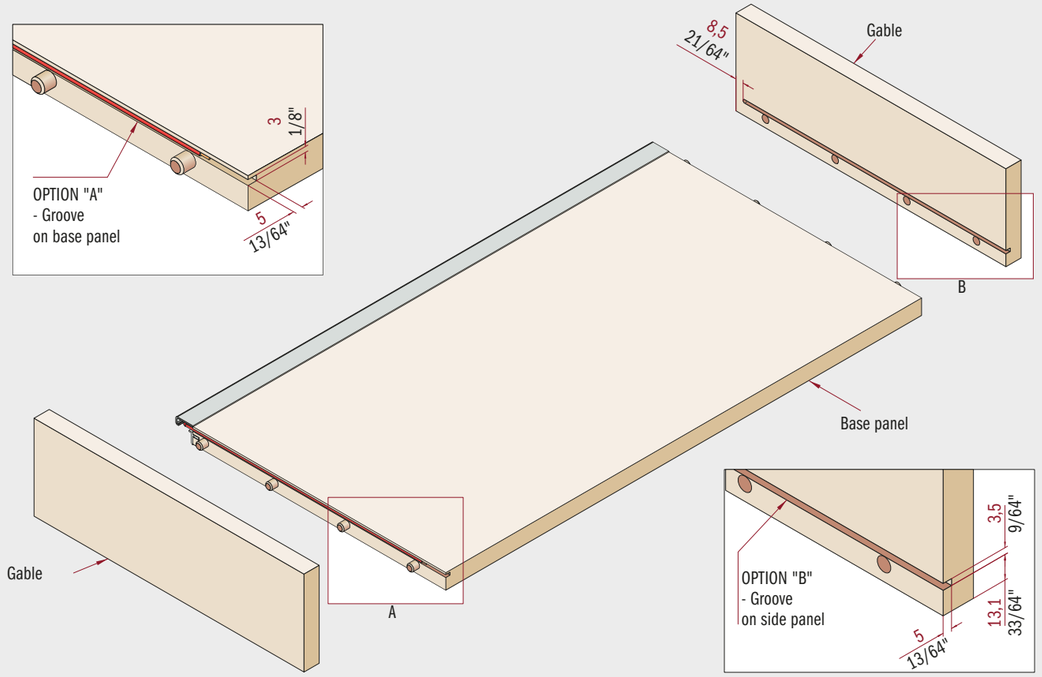

1730L

"GOLA" HORIZONTAL ALUMINUM SPACER CHANNEL PROFILE FOR UPPER CABINET WITH SLOT FOR LED STRIP, TRANSLUCENT DIFFUSER INCLUDED
50S Aluminum Clear Anodize
V12 Aluminum Black Matt Powder Coated
Other Colors and Lengths Available FROM ITALY

"GOLA" PROFILÉ D'ESPACEMENT HORIZONTAL EN ALUMINIUM POUR ARMOIRE DU HAUT AVEC FENTE POUR STRIP LED, DIFFUSEUR TRANSLUCIDE INCLUS
50S Aluminium Clair Anodisé
V12 Aluminium Noir Mat Peint à Poudre
Autres Couleurs et Longueurs Disponibles DE L'ITALIE

PERFIL "GOLA" HORIZONTAL SUPERIOR EN ALUMINIO PARA EL MUEBLE ALTO CON BANDA DIFUSORA TRANSLÚCIDA PARA BANDA LED INCLUIDA
50S Aluminio Anodizado Claro
V12 Aluminio Negro Mate Barnizado
Otras Colores y Terminaciones Disponibles DE ITALIA

Translucent diffuser Included
LED strip not included
For 18/19 mm panel thickness

Diffuseur translucide inclus
Bande LED non inclus
Pour panneau d'une épaisseur de 18/19mm

Banda difusora translúcida incluida
Banda de LED no incluida
Para un espesor del panel de 18/19mm

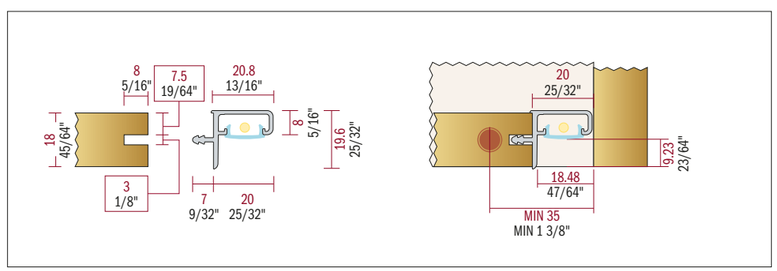

COLORS	ITEM NUMBER	LENGTH		PCS PER BOX	BOX DIMENSION mm W x D x H	BOX DIMENSION inch W x D x H	BOX WEIGHT KG	BOX WEIGHT LB	STOCK IN AMERICA MSRP PRICING USD METER	FOOT	EACH	BOX
50S	U1730L50SL21	2050	80 11/16"	10	2150 x 145 x 44	84 5/8" x 5 3/4" x 1 3/4"	6.00	13.23	25.961	7.913	53.220	532.201
50S	U1730L50SL41	4100	161 7/16"	10	4150 x 145 x 44	163 3/8" x 5 3/4" x 1 3/4"	12.00	26.46	19.673	5.996	80.659	806.593
V12	U1730LV12L21	2050	80 11/16"	10	2150 x 145 x 44	84 5/8" x 5 3/4" x 1 3/4"	6.00	13.23	28.147	8.579	57.701	577.014
V12	U1730LV12L41	4100	161 7/16"	10	4150 x 145 x 44	163 3/8" x 5 3/4" x 1 3/4"	12.00	26.46	24.476	7.460	100.352	1003.516

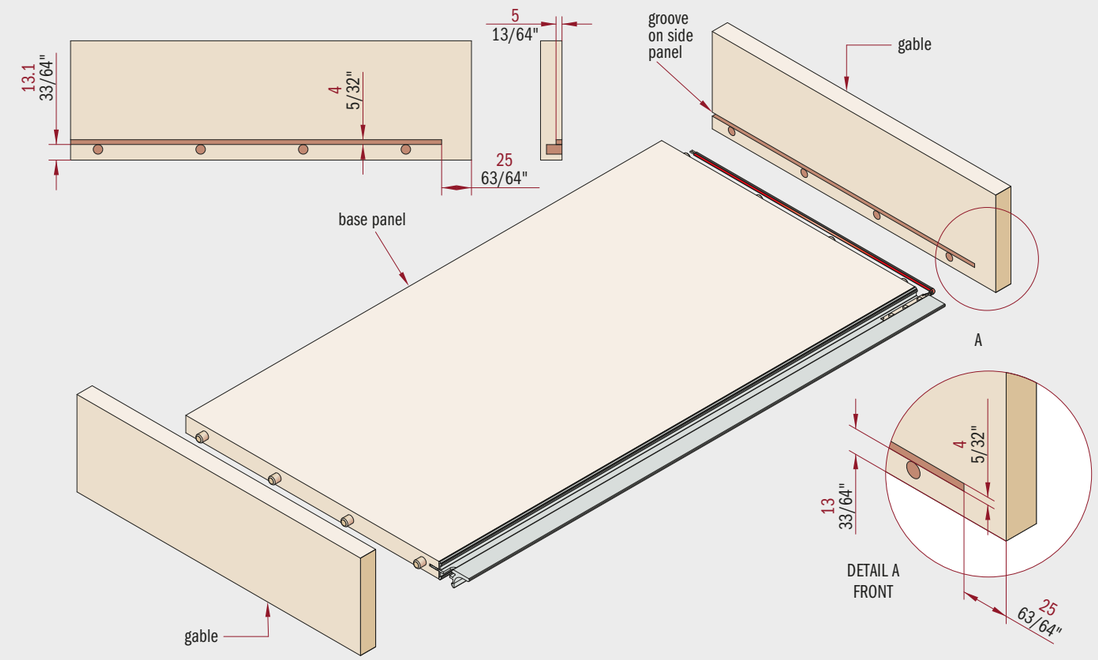

1730L2

"GOLA" HORIZONTAL ALUMINUM SPACER CHANNEL PROFILE FOR UPPER CABINET WITH TWO SLOT FOR LED STRIP, TRANSLUCENT DIFFUSER INCLUDED
50S Aluminum Clear Anodize
Other Colors and Lengths Available FROM ITALY

"GOLA" PROFILÉ D'ESPACEMENT HORIZONTAL EN ALUMINIUM POUR ARMOIRE DU HAUT AVEC DEUX FENTES POUR STRIP LED, DIFFUSEUR TRANSLUCIDE INCLUS
50S Aluminium Clair Anodisé
Autres Couleurs et Longueurs Disponibles DE L'ITALIE

PERFIL "GOLA" HORIZONTAL SUPERIOR EN ALUMINIO PARA EL MUEBLE ALTO CON DOS BANDAS DIFUSORA TRANSLÚCIDA PARA BANDA LED INCLUIDA
50S Aluminio Anodizado Claro
Otras Colores y Terminaciones Disponibles DE ITALIA

Translucent diffuser Included
LED strip not included
For 16 mm panel thickness

Diffuseur translucide inclus
Bande LED non inclus
Pour panneau d'une épaisseur de 16mm

Banda difusora translúcida incluida
Banda de LED no incluida
Para un espesor del panel de 16mm

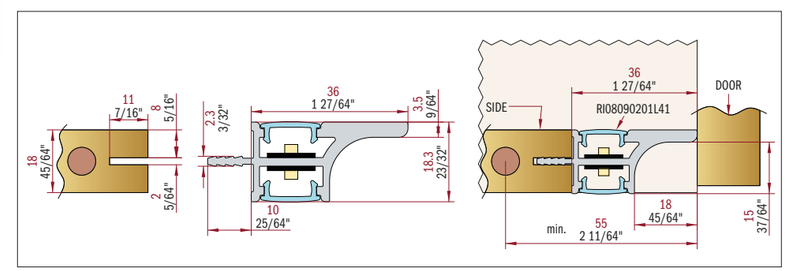

COLORS	ITEM NUMBER	LENGTH		PCS PER BOX	BOX DIMENSION mm W x D x H	BOX DIMENSION inch W x D x H	BOX WEIGHT KG	BOX WEIGHT LB	AVAILABLE FROM ITALY MSRP PRICING USD METER	FOOT	EACH	BOX
50S	R1730L250SL3	3000	118 1/8"	<<<<< MINIMUM ORDER AND PACKAGING TO BE CONFIRMED >>>>>					42.529	12.963	127.587	
50S	R1730L250SL41	4100	161 7/16"	<<<<< MINIMUM ORDER AND PACKAGING TO BE CONFIRMED >>>>>					36.486	11.121	149.593	

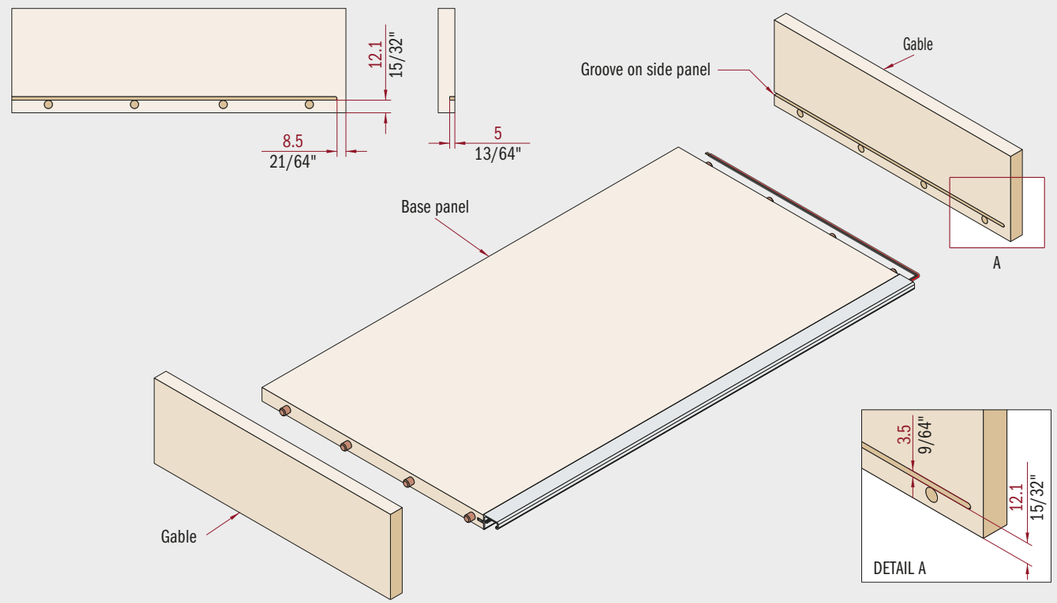

DRIP PANS

1746L

"GOLA" HORIZONTAL ALUMINUM SPACER CHANNEL PROFILE FOR UPPER CABINET WITH SLOT FOR LED STRIP, TRANSLUCENT DIFFUSER INCLUDED
50S Aluminum Clear Anodize
V12 Aluminum Black Matt Powder Coated
Other Colors and Lengths Available FROM ITALY

"GOLA" PROFILÉ D'ESPACEMENT HORIZONTAL EN ALUMINIUM POUR ARMOIRE DU HAUT AVEC FENTE POUR STRIP LED, DIFFUSEUR TRANSLUCIDE INCLUS
50S Aluminium Clair Anodisé
V12 Aluminium Noir Mat Peint à Poudre
Autres Couleurs et Longueurs Disponibles DE L'ITALIE

PERFIL "GOLA" HORIZONTAL SUPERIOR EN ALUMINIO PARA EL MUEBLE ALTO CON BANDA DIFUSORA TRANSLÚCIDA PARA BANDA LED INCLUIDA
50S Aluminio Anodizado Claro
V12 Aluminio Negro Mate Barnizado
Otras Colores y Terminaciones Disponibles DE ITALIA

Translucent diffuser Included
LED strip not included
For 16 mm panel thickness

Diffuseur translucide inclus
Bande LED non inclus
Pour panneau d'une épaisseur de 16mm

Banda difusora translúcida incluida
Banda de LED no incluida
Para un espesor del panel de 16mm

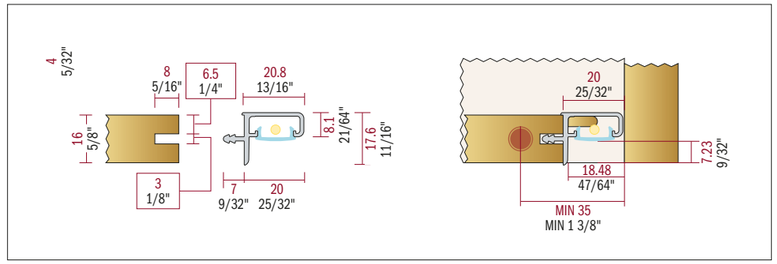

COLORS	ITEM NUMBER		LENGTH	PCS PER BOX	BOX DIMENSION mm W x D x H	BOX DIMENSION inch W x D x H	BOX WEIGHT KG	BOX WEIGHT LB	STOCK IN AMERICA MSRP PRICING USD METER	FOOT	EACH	BOX
50S	U1746L50SL21	2050	80 11/16"	10	2150 x 145 x 44	84 5/8" x 5 3/4" x 1 3/4"	6.00	13.23	25.961	7.913	53.220	532.201
50S	U1746L50SL41	4100	161 7/16"	10	4150 x 145 x 44	163 3/8" x 5 3/4" x 1 3/4"	12.00	26.46	19.673	5.996	80.659	806.593
V12	U1746LV12L21	2050	80 11/16"	10	2150 x 145 x 44	84 5/8" x 5 3/4" x 1 3/4"	6.00	13.23	28.147	8.579	57.701	577.014
V12	U1746LV12L41	4100	161 7/16"	10	4150 x 145 x 44	163 3/8" x 5 3/4" x 1 3/4"	12.00	26.46	24.476	7.460	100.352	1003.516

DRIP PANS

PROTECTION POUR LE MEUBLE SOUS-ÉVIER

PROTECCIÓN PARA EL MUEBLE DE FREGADERO

Why...
It's an efficient way to protect the most vulnerable cabinet in the kitchen.

- Quick to install, no tools required
- Cabinet protection against water and dirt
- Easy to clean, durable and water resistant
- Adjustable size to fit your cabinet

Pourquoi...
C'est un moyen efficace de protéger l'armoire le plus vulnérables dans la cuisine.

- *Rapide à installer, aucun outils nécessaire*
- *Protection de l'armoire contre l'eau et la saleté*
- *Facile à nettoyer, durable et Résistant à l'eau*
- *Taille adjustable pour s'adapter à votre armoire*

Por qué...
es una eficiente foma de proteger la parte masvulnerable de un mueble...

- Rápido de instalar, sin necesidad de herramientas
- Protección del gabinete contra el agua y la suciedad
- Fácil de limpiar, resistentes y resistente al agua
- Talla ajustable para adaptarse a su gabinete

Technical Specifications...
- Material: Aluminum or PVC
- Performance: Anti-Scratch and Anti-Stain surface processing
- Environment: 100% recyclable material

Spécifications Techniques...
- *Matériel: Aluminium ou PVC*
- *Performance: Traitement de surface Anti-Rayures et Anti-Taches*
- *Environnement: Matériaux 100% recyclables*

Especificaciones Técnicas...
- Material: Aluminio o PVC
- Rendimiento: Tratamiento de superficies Anti-Arañazos y Anti-Mancha
- Medio Ambiente: Materiales 100% reciclables

DRIP PANS

PROTECTION POUR LE MEUBLE SOUS-ÉVIER

PROTECCIÓN PARA EL MUEBLE DE FREGADERO

930G (GASKETS INCLUDED)

PLASTIC "DRIP PAN" PROTECTOR FOR BASE CABINET
Thermoplastic protection for sink cabinets with mm 580 maximum depth and removable rubber edges.

PROTECTEUR EN PLASTIQUE POUR BAS D'ARMOIRE
Protection sous évier en matériau thermoplastique, profondeur maximale mm 580.
Avec bords latérales en caoutchouc et amovibles.

BASE PROTECTORA EN MATERIAL PLASTICO PARA BASE DE MUEBLE
Protección para el fondo del mueble fregadero en material termoplástico con profundidad maxima 580 mm y con bordes laterales extraíbles de goma.

ITEM NUMBER	NOMINAL CABINET SIZE	EXTERIOR CABINET DIMENSIONS width 16mm gables		EXTERIOR CABINET DIMENSIONS width 19mm gables		INTERIOR CABINET DIMENSIONS width		INTERIOR CABINET DIMENSIONS depth		PCS PER BOX	BOX DIMENSION W x D x H	BOX DIMENSION W x D x H	BOX WEIGHT		FOB SCILM AMERICA MSRP USD PRICING	
		mm	inch	mm	inch	mm	inch	mm	inch		mm	inch	KG	LB	EACH	BOX
V930/0590/1G/T	24"	622	24 31/64"	628	24 23/32"	590	23 7/32"	585	23 1/32"	20	600 x 200 x 600	23 5/8" x 7 7/8" x 23 5/8"	8.90	19.62	28.108	562.160
V930/0890/1G/T	36"	922	36 19/64"	928	36 17/32"	890	35 1/32"	585	23 1/32"	20	900 x 200 x 600	35 3/8" x 7 7/8" x 23 5/8"	13.60	29.98	34.959	699.180
V930/1190/1G/T	48"	1222	48 7/64"	1228	48 11/32"	1190	46 55/64"	585	23 1/32"	20	1200 x 200 x 600	47 1/4" x 7 7/8" x 23 5/8"	17.90	39.46	43.381	867.620

VF930

REPLACEMENT GASKET FOR "DRIP PAN" PROTECTOR FOR BASE CABINET

JOINT D'ÉTANCHÉITÉ DE REMPLACEMENT POUR PROTECTEUR DE BAS D'ARMOIRE

GUARNICION DE PROTECCION PARA MUEBLE BAJO

ITEM NUMBER	LENGTH mm	LENGTH inch	PCS PER BOX	BOX DIMENSION mm W x D x H	BOX DIMENSION inch W x D x H	BOX WEIGHT KG	BOX WEIGHT LB	STOCK IN AMERICA MSRP PRICING USD EACH	STOCK IN AMERICA MSRP PRICING USD BOX
VF/930/1750	1750	68 7/8"	40	1830 x 80 x 70	72" x 3 1/8" x 2 3/4"	1.20	2.65	6.381	255.240

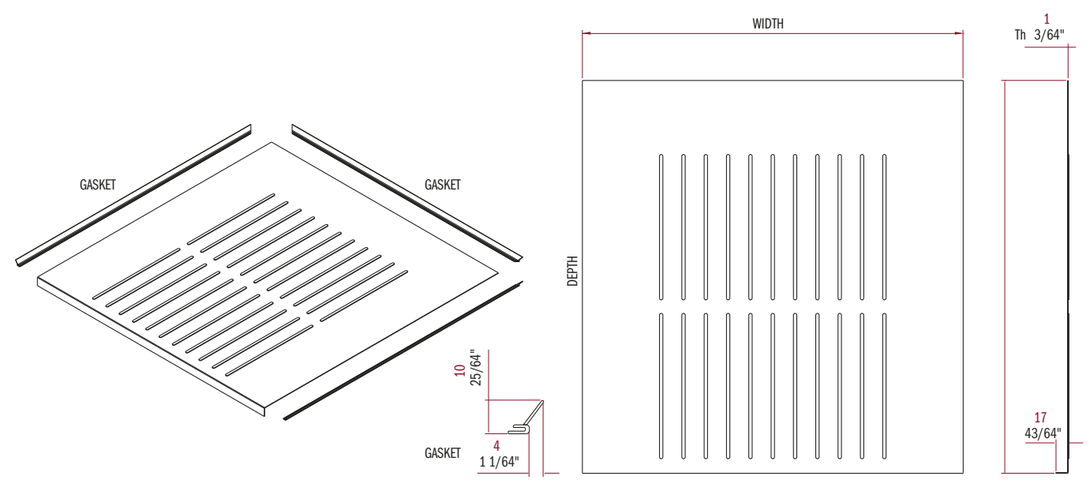

920

ORGANIZER
Adaptable under-sink organizer for efficient space-saving storage, to be used with the Thermoplastic protection for sink cabinets model 930/G.

CONTENEUR DE STOCKAGE
Conteneur de stockage en matériau thermoplastique adaptable à la protection pour fond évier mod. 930/G.

CONTENEDOR
Contenedor de material termoplástico adaptable para la protección para el fondo del mueble fregadero mod. 930/G.

COLORS	ITEM NUMBER	PCS PER BOX	BOX DIMENSION mm W x D x H	BOX DIMENSION inch W x D x H	BOX WEIGHT KG	BOX WEIGHT LB	STOCK IN AMERICA MSRP PRICING USD EACH	STOCK IN AMERICA MSRP PRICING USD BOX
	V920/T	20	600 x 390 x 600	23 5/8" x 15 3/8" x 23 5/8"	4.00	8.82	18.829	376.580

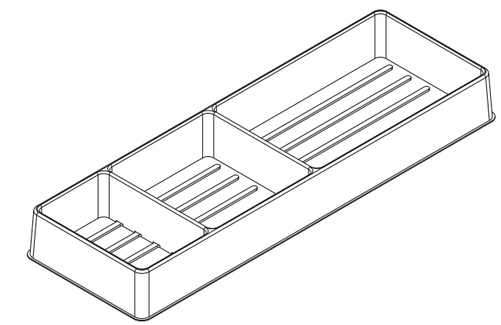

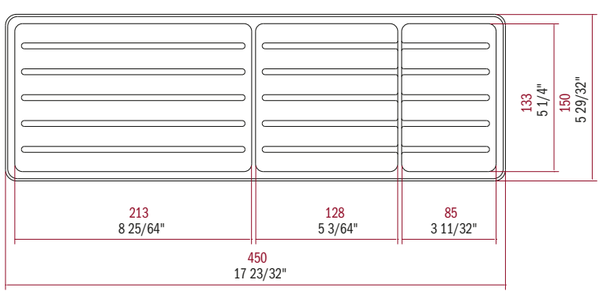

753LY (GASKETS INCLUDED)

ALUMINUM "DRIP PAN" PROTECTOR FOR BASE CABINET
Other Sizes Available FROM ITALY

PROTECTEUR EN ALUMINIUM POUR BAS D'ARMOIRE
Autres Dimensions Disponibles DE L'ITALIE

BASE PROTECTORA EN ALUMINIO PARA BASE DE MUEBLE
Otros Dimensiones Disonibles DE ITALIA

COLORS	ITEM NUMBER	Panel Thickness mm	Panel Thickness inch	Exterior Cabinet mm	Exterior Cabinet inch	Interior Cabinet width mm	Interior Cabinet width inch	Interior Cabinet depth mm	Interior Cabinet depth inch	PCS PER BOX	BOX DIMENSION mm W x D x H	BOX DIMENSION inch W x D x H	BOX WEIGHT KG	BOX WEIGHT LB	FOB SCILM AMERICA MSRP USD PRICING EACH	FOB SCILM AMERICA MSRP USD PRICING BOX
	U753LY890-22	16	5/8"	914	36"	882	34 3/4"	584	23"	20	900 x 240 x 710	35 3/8" x 9 1/2" x 28"	14.50	31.97	39.490	789.800
	U753LY8105-22	16	5/8"	1067	42"	1035	40 3/4"	584	23"	20	1200 x 240 x 710	47 1/4" x 9 1/2" x 28"	17.00	37.48	43.378	867.560
	U753LY8120-22	16	5/8"	1219	48"	1187	46 3/4"	584	23"	20	1200 x 240 x 710	47 1/4" x 9 1/2" x 28"	19.00	41.89	46.606	932.120
	U753LY990-22	19	3/4"	914	36"	876	34 1/2"	584	23"	20	900 x 240 x 710	35 3/8" x 9 1/2" x 28"	14.50	31.97	45.314	906.280
	U753LY9105-22	19	3/4"	1067	42"	1029	40 1/2"	584	23"	20	1200 x 240 x 710	47 1/4" x 9 1/2" x 28"	17.00	37.48	50.266	1005.320
	U753LY9120-22	19	3/4"	1219	48"	1181	46 1/2"	584	23"	20	1200 x 240 x 710	47 1/4" x 9 1/2" x 28"	19.00	41.89	49.713	994.260

GU750L

(ADDITIONAL GASKET FOR REPLACEMENT ONLY)

REPLACEMENT GASKET FOR "DRIP PAN" PROTECTOR FOR BASE CABINET

JOINT D'ÉTANCHÉITÉ DE REMPLACEMENT POUR PROTECTEUR DE BAS D'ARMOIRE

GUARNICION DE PROTECCION PARA MUEBLE BAJO

COLORS	ITEM NUMBER	LENGTH mm	LENGTH inch	PCS PER BOX	BOX DIMENSION mm W x D x H	BOX DIMENSION inch W x D x H	BOX WEIGHT KG	BOX WEIGHT LB	STOCK IN AMERICA MSRP PRICING USD METER	STOCK IN AMERICA MSRP PRICING USD FOOT	STOCK IN AMERICA MSRP PRICING USD EACH	STOCK IN AMERICA MSRP PRICING USD BOX
	UGU750L-22.02	1330	52 3/8"	40	1500 x 95 x 65	59" x 3 3/4" x 2 1/2"	2.50	5.51	5.248	1.600	6.980	279.194

THE DIFFERENCE IN THE KITCHEN

CROSSBAR/RAIL PROFILES

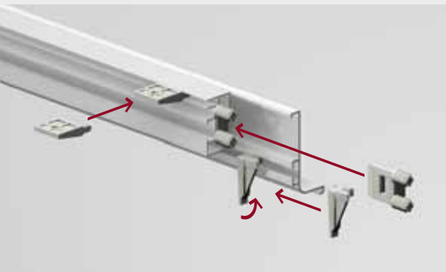

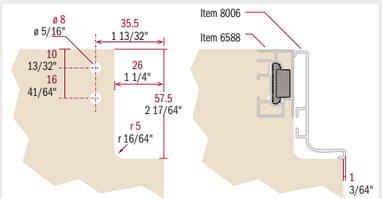

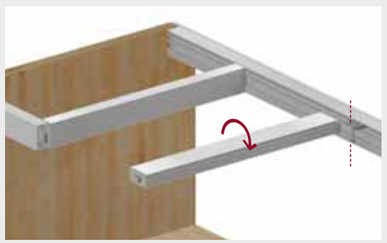

Why...

It's an effective, practical and economical way to build not only the sink cabinet, but all base cabinets.

- Complete system for the construction of the cabinets;
- Quick to install
- Economical: no need for backs, roofs or edge banded stretchers or rails
- Cabinets built with aluminum cross bars are extremely durable, strong and provide easier and safer to handle as well as giving a modern flair
- Easy to manage: bars are to be cut to size and plastic accessories are designed to complete the assembly
- Options: the accessory 6588TP01 provides reinforced cross structure for stronger support
- Options: the accessory CSP0149-01SF allows a direct interlock with gola profile mod. 8006 with no need for support SU106 or SU126
- Options: the accessory CSP0121-01SF provides fastening to the countertop

Pourquoi...

C'est un moyen efficace, pratique et économique de construire non seulement le meuble sous l'évier, mais toutes les armoires du bas.

- *Système complet pour la construction des armoires;*
- *Rapide à installer*
- *Economique: pas besoin de dos, dessus ou de traverse plaqué*
- *Les armoires construits avec des transverse en aluminium sont extrêmement durables, plus résistants, se manipule plus facilement en toute sécurité et donne une allure moderne*
- *Facile à gérer: les traverses sont couper à la dimension requis et les accessoires en plastique sont conçus pour compléter l'assemblage*
- *Options: l'accessoire 6588TP01 permet un renfort croisée pour une structure avec soutien accru*
- *Options: l'accessoire CSP0149-01SF permet l'attachement à la "GOLA 8006 - 8044" sans avoir le besoin d'utiliser le support SU106 ou SU126*
- *Options: l'accessoire CSP0121-01SF permet de fixer le plan de travail*

Por qué...

Es una manera eficaz, práctica y económica de construir no sólo el mueble del fregadero, pero todos los moulos bajos.

- Sistema completo para la construcción de los modulos
- Rápido de instalar
- Económico: no hay necesidad de que las partes posteriores, techos o laterales lleven mecanizaciones como fresados, canale etc
- Los modulos construidos con las barras transversales son de una extraordinaria durabilidad, son más fuerte y proporcionan un instalacion fácil y segura, dando asi un toque moderno, tecnico y elegante
- Fácil de montar, las barras deben ser cortados a medida y accesorios de plástico están diseñados para completar el montaje
- Opciones: 6588TP01 el accesorio proporciona una estructura reforzada en cruz para soportar un mayor apoyo
- Opciones: el accesorio CSP0149-01SF proporciona la union a la "GOLA 8006"sin necesidad de utilizar el soporte SU106 o SU126
- Opciones: el accesorio CSP0121-01SF proporciona fijación a la encimera

Technical Specifications...

Material: Aluminum and Plastic
Performance: Lined aluminum extrusion and highly resistant plastic injection accessories
Environment: 100% recyclable materials

Spécifications Techniques...

Matière: Aluminium et Plastique
Performance: extrusion d'aluminium lignée avec des accessoires très résistant en plastique injecté
Environnement: Matériau 100% recyclable

Especificaciones Técnicas...

Material: Aluminio
Rendimiento: extrusión de aluminio forrado y accesorios de plástico de alta resistencia de inyección
Medio ambiente: 100% reciclable

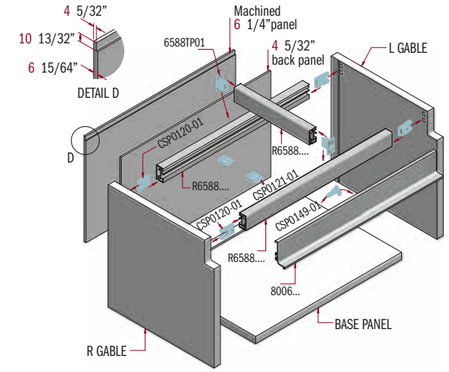

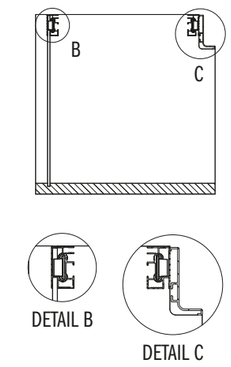

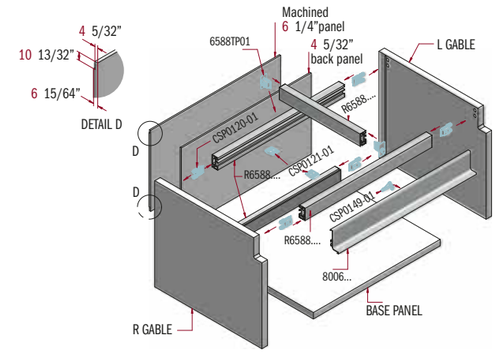

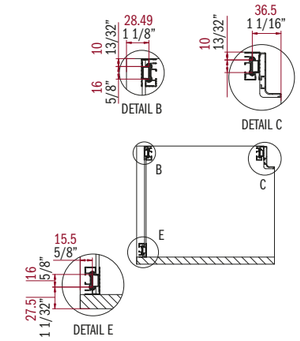

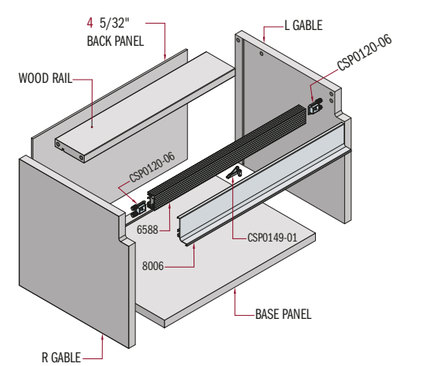

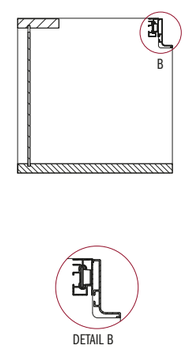

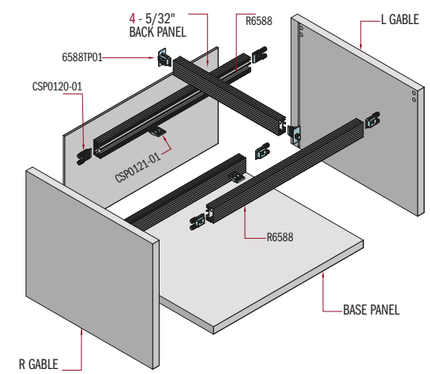

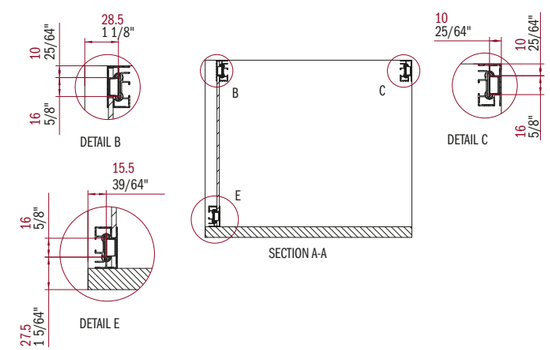

6588

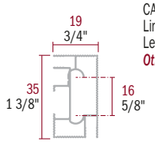

ALUMINUM CROSS BAR SYSTEM FOR BASE CABINET
Lined Anodized Aluminum
Length without dowels
Other Sizes Available FROM ITALY

SYSTÈME EN TRAVERSE EN ALUMINIUM POUR ARMOIRE DU BAS
Aluminium ligné anodisé
Longueur sans chevilles
Autres Dimensions Disponibles DE L'ITALIE

SISTEMA DE BARRA TRANSVERSAL PARA GABINETE BASE
Aluminio Rayado
Medida sin tapas
Otros Dimensiones Disonibles DE ITALIA

ITEM NUMBER	LENGTH		PCS PER BOX	BOX DIMENSION		BOX WEIGHT		STOCK IN AMERICA MSRP PRICING USD			
				mm	inch						
	mm	inch		W x D x H	W x D x H	KG	LB	METER	FOOT	EACH	BOX
UR6588L27	2650	104 5/16"	10	2720 x 125 x 95	107 1/8" x 4 7/8" x 3 3/4"	10.50	23.15	12.869	3.922	34.103	341.029

CSP0120

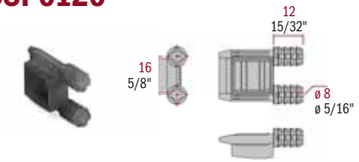

CLOSING END CAP WITH BUILT-IN DOWELS
Caps with built in dowels have to be pinned down

ENBOUT AVEC GOUJONS
Les embouts avec goujons intégrés doivent être épinglés

TAPA CON TARUGOS INCORPORADOS
Las tapas con tarrugos encorporatos tienen que ser punzonados

ITEM NUMBER	PCS PER BOX	BOX DIMENSION		BOX WEIGHT		STOCK IN AMERICA MSRP PRICING USD	
		mm	inch				
		W x D x H	W x D x H	KG	LB	EACH	BOX
UCSP0120-06SF	100	220 x 165 x 140	8 5/8" x 6 1/2" x 5 1/2"	0.50	1.10	0.606	60.600

6588TP01

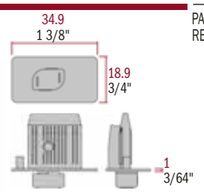

PAIR OF L/R INTERLOCKING END CAPS FOR REINFORCED STRUCTURES

PAIRE D'EMBOUTS DE VERROUILLAGE G/D POUR STRUCTURES RENFORCÉES

PAR DE TAPAS ENTRELAZANTES PARA PERFILES DE REFUERZO

ITEM NUMBER	PAIRS PER BOX	BOX DIMENSION		BOX WEIGHT		STOCK IN AMERICA MSRP PRICING USD	
		mm	inch				
		W x D x H	W x D x H	KG	LB	PAIR	BOX
U6588TP01	50	310 x 170 x 120	12 1/4" x 6 3/4" x 4 3/4"	0.50	1.10	2.422	121.100

CSP0149

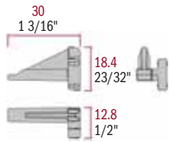

ATTACHMENT KEY FOR "GOLA" 8006 – 8021

CLÉ DE FIXATION POUR "GOLA" 8006 - 8021

LLAVE DE FIJACION PARA PERFIL "GOLA" 8006 - 8021

ITEM NUMBER	PCS PER BOX	BOX DIMENSION		BOX WEIGHT		STOCK IN AMERICA MSRP PRICING USD	
		mm	inch				
		W x D x H	W x D x H	KG	LB	EACH	BOX
UCSP0149-01SF	200	310 x 170 x 120	12 1/4" x 6 3/4" x 4 3/4"	0.50	1.10	1.397	279.400

CSP0121

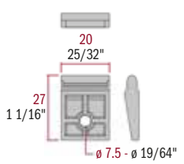

PLATE FOR COUNTERTOP FASTENING

PLAQUE DE FIXATION DE COMPTOIR

PLATINA PARA FIJACION DELTOPE O MOSTRADOR

ITEM NUMBER	PCS PER BOX	BOX DIMENSION		BOX WEIGHT		STOCK IN AMERICA MSRP PRICING USD	
		mm	inch				
		W x D x H	W x D x H	KG	LB	EACH	BOX
UCSP0121-01SF	100	220 x 165 x 140	8 5/8" x 6 1/2" x 5 1/2"	0.40	0.88	1.160	116.000

6597

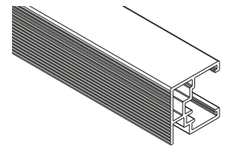

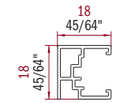

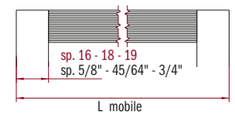

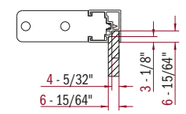

ALUMINUM CROSS BAR SYSTEM FOR BASE CABINET
Lined Aluminum
Other Sizes Available FROM ITALY

SISTEME EN TRAVERSE EN ALUMINIUM POUR ARMOIRE DU BAS
Aluminium Ligné
Autres Dimensions Disponibles DE L'ITALIE

SISTEMA DE BARRA TRANSVERSAL PARA GABINET BASE
Aluminio Rayado
Otros Dimensiones Disonibles DE ITALIA

ITEM NUMBER	LENGTH		PCS PER BOX	BOX DIMENSION		BOX WEIGHT		STOCK IN AMERICA MSRP PRICING USD			
				mm	inch						
	mm	inch		W x D x H	W x D x H	KG	LB	METER	FOOT	EACH	BOX
U6597L27	2670	105 1/8"	10	2740 x 145 x 110	107 7/8" x 5 3/4" x 4 3/8"	6.50	14.33	7.318	2.231	19.539	195.391

KIT 6597TS

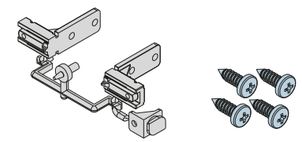

CLOSING END CAP (SCREWED) WITH SECURING SCREWS
R & L Caps (50 pairs) + Screws (110)

EMBOUT (VISSÉ) AVEC VIS DE FIXATION
Embouts D & G (50 paires) + Vis (110)

TAPA (PARA ÁTORNILLAR) CON TORNILLOS DE FIXATION
Set de 50 D&I Tapas + 110 Tornillos

ITEM NUMBER	KIT PER BOX	BOX DIMENSION		BOX WEIGHT		STOCK IN AMERICA MSRP PRICING USD	
		mm	inch				
		W x D x H	W x D x H	KG	LB	KIT	BOX
UKIT.6597TS-A	1	460 x 170 x 120	18 1/8" x 6 3/4" x 4 3/4"	0.50	1.10	170.787	170.787

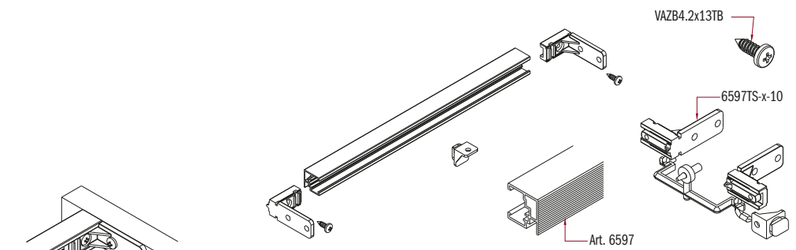

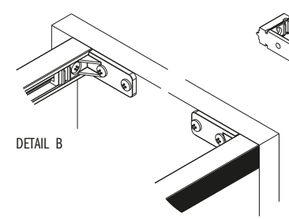

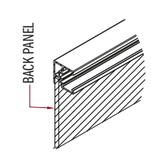

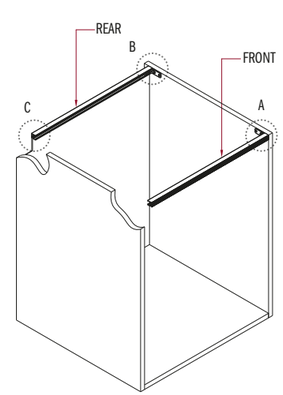

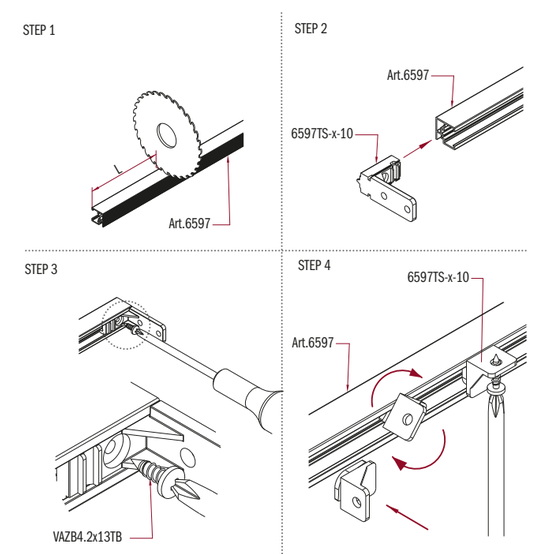

DRAWER ACCESSORIES

800

Why...
The system consists of two profiles: double rail and single tray.
It's equipped with plastic end caps and dividers in matching colour that can be placed as needed thanks to an innovative snap-fit system.

Pourquoi...
Le Système séparateur de tiroir en aluminium composé de deux profilés, d'un double rail et d'un bac.
Équipé de bouchons en plastique et de séparateurs pouvant être positionnés à votre gré, grâce à un système innovant à encastrement.

Por qué...
Sistema de separadores de cajones de aluminio compuesto por dos perfiles, doble canal y una sola bandeja
Articulado con tapas de plástico y separadores que puede colocar a su gusto, gracias al innovador sistema de encaje que utilizan.

Aluminum Clear Anodize | *Aluminium Clair Anodisé* | Aluminio Anodizado Claro

Aluminum Titanium Anodize | *Aluminium Titanium Anodisé* | Aluminio Anodizado Titanioo

Aluminum Anthracite Anodize | *Aluminium Anthracite Anodisé* | Aluminio Antracita Anodizado

5500

ALUMINUM PROFILE WITH DOUBLE RAIL FOR DRAWERS DIVIDER
50C Aluminum Clear Anodize
C1I Aluminum Titanium Anodize
C1T Aluminum Anthracite Anodize
Other Colors Available FROM ITALY

PROFILÉ EN ALUMINIUM AVEC DOUBLE RAIL POUR SÉPARATEUR DE TIROIR
50C Aluminium Argent Anodisé
C1I Aluminium Champagne Anodisé
C1T Aluminium Anthracite Anodisé
Autres Couleurs Disponibles DE L'ITALIE

PERFILE DE ALUMINIO CON DOBLE CANAL POR SEPARADOR DE CAJONES
50C Aluminio Anodizado Silber
C1I Aluminio Champagne Anodizado
C1T Aluminio Antracita Anodizado
Otros Colores Disponibles DE ITALIA

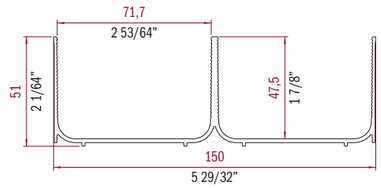

	ITEM NUMBER	LENGTH mm	LENGTH inch	PCS PER BOX	BOX DIMENSION mm W x D x H	BOX DIMENSION inch W x D x H	BOX WEIGHT KG	BOX WEIGHT LB	STOCK IN AMERICA MSRP PRICING USD METER	FOOT	EACH	BOX
50C	UR550050CL21	2100	82 11/16"	4	160 x 160 x 2200	6 1/4" x 6 1/4" x 86 5/8"	13.83	30.49	73.256	22.328	153.838	615.350
C1I	UR5500C1IL21	2100	82 11/16"	4	160 x 160 x 2200	6 1/4" x 6 1/4" x 86 5/8"	13.83	30.49	79.532	24.241	167.017	668.069
C1T	UR5500C1TL21	2100	82 11/16"	4	160 x 160 x 2200	6 1/4" x 6 1/4" x 86 5/8"	13.83	30.49	95.538	29.120	200.630	802.519

5501

ALUMINUM PROFILE WITH SINGLE RAIL FOR DRAWERS DIVIDER
50C Aluminum Clear Anodize
C1I Aluminum Titanium Anodize
C1T Aluminum Anthracite Anodize
Other Colors Available FROM ITALY

PROFILÉ EN ALUMINIUM AVEC BAC RAIL POUR SÉPARATEUR DE TIROIR
50C Aluminium Argent Anodisé
C1I Aluminium Champagne Anodisé
C1T Aluminium Anthracite Anodisé
Autres Couleurs Disponibles DE L'ITALIE

PERFILE DE ALUMINIO CON UNA SOLA BANDEJA POR SEPARADOR DE CAJONES
50C Aluminio Anodizado Silber
C1I Aluminio Champagne Anodizado
C1T Aluminio Antracita Anodizado
Otros Colores Disponibles DE ITALIA

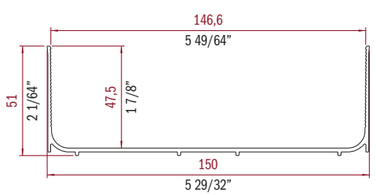

	ITEM NUMBER	LENGTH mm	LENGTH inch	PCS PER BOX	BOX DIMENSION mm W x D x H	BOX DIMENSION inch W x D x H	BOX WEIGHT KG	BOX WEIGHT LB	STOCK IN AMERICA MSRP PRICING USD METER	FOOT	EACH	BOX
50C	UR550150CL21	2100	82 11/16"	4	160 x 160 x 2200	6 1/4" x 6 1/4" x 86 5/8"	10.60	23.37	62.355	19.006	130.946	523.782
C1I	UR5501C1IL21	2100	82 11/16"	4	160 x 160 x 2200	6 1/4" x 6 1/4" x 86 5/8"	10.60	23.37	68.631	20.919	144.125	576.500
C1T	UR5501C1TL21	2100	82 11/16"	4	160 x 160 x 2200	6 1/4" x 6 1/4" x 86 5/8"	10.60	23.37	80.525	24.544	169.103	676.410

800TP

PLASTIC CAP FOR ART. 5500
85 = Color Match for 50C
82 = Color Match for C1I
39 = Color Match for C1T

BOUCHON EN PLASTIQUE POUR ART. 5500
85 = Couleur Correspondante pour 50C
82 = Couleur Correspondante pour C1I
39 = Couleur Correspondante pour C1T

TAPA DE PLASTICO POR ART. 5500
85 = Ajuste de Color 50C
82 = Ajuste de Color C1I
39 = Ajuste de Color C1T

	ITEM NUMBER	PCS PER BOX	BOX DIMENSION mm W x D x H	BOX DIMENSION inch W x D x H	BOX WEIGHT KG	BOX WEIGHT LB	STOCK IN AMERICA MSRP PRICING USD EACH	BOX
85	U800TP-85SF	128	120 x 170 x 460	4 3/4" x 6 3/4" x 18 1/8"	2.292	5.05	1.255	160.640
82	U800TP-82SF	128	120 x 170 x 460	4 3/4" x 6 3/4" x 18 1/8"	2.292	5.05	1.255	160.640
39	U800TP-39SF	128	120 x 170 x 460	4 3/4" x 6 3/4" x 18 1/8"	2.292	5.05	1.255	160.640

800PC

PLASTIC KNIFE BLOCK DIVIDER FOR ART. 5501
85 = Color Match for 50C
82 = Color Match for C1I
39 = Color Match for C1T

SÉPARATEAUR PORTE-COUTEAUX EN PLASTIQUE POUR ART. 5501
85 = Couleur Correspondante pour 50C
82 = Couleur Correspondante pour C1I
39 = Couleur Correspondante pour C1T

TAPA PORTACUCHILLAS DE PLASTICO POR ART. 5501
85 = Ajuste de Color 50C
82 = Ajuste de Color C1I
39 = Ajuste de Color C1T

	ITEM NUMBER	PCS PER BOX	BOX DIMENSION mm W x D x H	BOX DIMENSION inch W x D x H	BOX WEIGHT KG	BOX WEIGHT LB	STOCK IN AMERICA MSRP PRICING USD EACH	BOX
85	U800PC-85SF	32	120 x 170 x 460	4 3/4" x 6 3/4" x 18 1/8"	1.5368	3.39	2.831	90.592
82	U800PC-82SF	32	120 x 170 x 460	4 3/4" x 6 3/4" x 18 1/8"	1.5368	3.39	2.831	90.592
39	U800PC-39SF	32	120 x 170 x 460	4 3/4" x 6 3/4" x 18 1/8"	1.5368	3.39	2.831	90.592

800TG

PLASTIC CAP FOR ART. 5501
85 = Color Match for 50C
82 = Color Match for C1I
39 = Color Match for C1T

BOUCHON EN PLASTIQUE POUR ART. 5501
85 = Couleur Correspondante pour 50C
82 = Couleur Correspondante pour C1I
39 = Couleur Correspondante pour C1T

TAPA DE PLASTICO POR ART. 5501
85 = Ajuste de Color 50C
82 = Ajuste de Color C1I
39 = Ajuste de Color C1T

	ITEM NUMBER	PCS PER BOX	BOX DIMENSION mm W x D x H	BOX DIMENSION inch W x D x H	BOX WEIGHT KG	BOX WEIGHT LB	STOCK IN AMERICA MSRP PRICING USD EACH	BOX
85	U800TG-85SF	64	120 x 180 x 310	4 3/4" x 7 1/8" x 12 1/4"	2.2408	4.94	1.517	97.088
82	U800TG-82SF	64	120 x 180 x 310	4 3/4" x 7 1/8" x 12 1/4"	2.2408	4.94	1.517	97.088
39	U800TG-39SF	64	120 x 180 x 310	4 3/4" x 7 1/8" x 12 1/4"	2.2408	4.94	1.517	97.088

800VP

PLASTIC PAN FOR ART. 5505 AND 5501
85 = Color Match for 50C
82 = Color Match for C1I
39 = Color Match for C1T

CONTENEUR EN PLASTIQUE POUR ART. 5500 ET 5501
85 = Couleur Correspondante pour 50C
82 = Couleur Correspondante pour C1I
39 = Couleur Correspondante pour C1T

CONTENEDOR DE PLASTICO POR ART. 5500 Y 5501
85 = Ajuste de Color 50C
82 = Ajuste de Color C1I
39 = Ajuste de Color C1T

	ITEM NUMBER	PCS PER BOX	BOX DIMENSION mm W x D x H	BOX DIMENSION inch W x D x H	BOX WEIGHT KG	BOX WEIGHT LB	STOCK IN AMERICA MSRP PRICING USD EACH	BOX
85	U800VP-85SF	10	120 x 170 x 460	4 3/4" x 6 3/4" x 18 1/8"	1.00	2.20	6.271	62.710
82	U800VP-82SF	10	120 x 170 x 460	4 3/4" x 6 3/4" x 18 1/8"	1.00	2.20	6.271	62.710
39	U800VP-39SF	10	120 x 170 x 460	4 3/4" x 6 3/4" x 18 1/8"	1.00	2.20	6.271	62.710

800SP

PLASTIC DIVIDER FOR ART. 5500
85 = Color Match for 50C
82 = Color Match for C1I
39 = Color Match for C1T

SÉPARATEUR EN PLASTIQUE POUR ART. 5500
85 = Couleur Correspondante pour 50C
82 = Couleur Correspondante pour C1I
39 = Couleur Correspondante pour C1T

SEPARADORE DE PLASTICO POR ART. 5500
85 = Ajuste de Color 50C
82 = Ajuste de Color C1I
39 = Ajuste de Color C1T

	ITEM NUMBER	PCS PER BOX	BOX DIMENSION mm W x D x H	BOX DIMENSION inch W x D x H	BOX WEIGHT KG	BOX WEIGHT LB	STOCK IN AMERICA MSRP PRICING USD EACH	BOX
85	U800SP-85SF	128	120 x 170 x 610	4 3/4" x 6 3/4" x 24"	2.036	4.49	1.386	177.408
82	U800SP-82SF	128	120 x 170 x 610	4 3/4" x 6 3/4" x 24"	2.036	4.49	1.386	177.408
39	U800SP-39SF	128	120 x 170 x 610	4 3/4" x 6 3/4" x 24"	2.036	4.49	1.386	177.408

918

LINERS
Non-sliding "smooth" fabric mat, thickness 1,2 mm.

TAPIS
Tapis antidérapant "lisse" textile, épaisseur 1,2 mm.

ALFOMBRAS
Alfombra antideslizamiento lisa tejido espesor 1,2 mm.

COLORS	ITEM NUMBER	WIDTH		LENGTH		PCS PER BOX	BOX DIMENSION		BOX WEIGHT		STOCK IN AMERICA MSRP PRICING USD			
							mm	inch						
		mm	inch	mm	inch		W x D x H	W x D x H	KG	LB	METER	FOOT	EACH	BOX
	V918/H/1450/GCH/12	1450	57 1/16"	10000	393 11/16"	1	1500 x 170 x 170	59" x 6 3/4" x 6 3/4"	13.00	28.66	43.791	13.347	437.910	437.910
	V918/H/1450/GAN/12	1450	57 1/16"	10000	393 11/16"	1	1500 x 170 x 170	59" x 6 3/4" x 6 3/4"	13.00	28.66	43.791	13.347	437.910	437.910

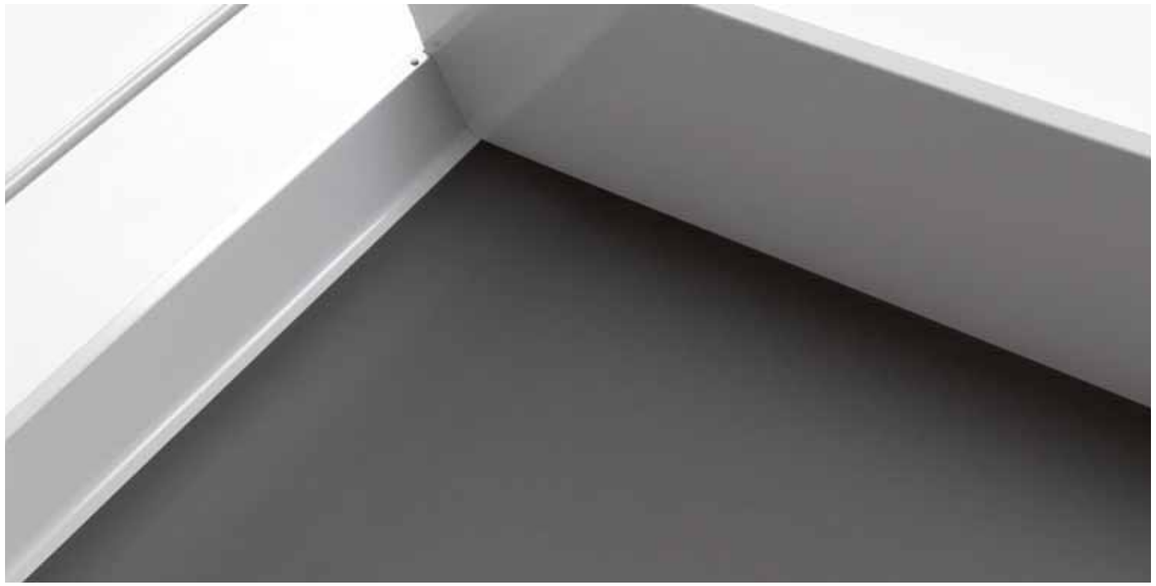

Light Gray (GCH)

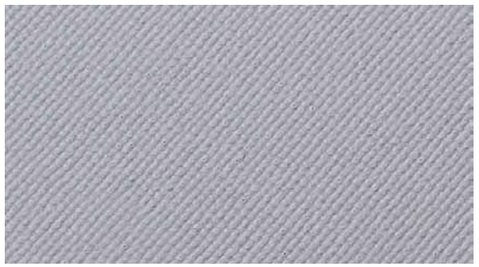

Dark Gray (GAN)

540

PATENT PENDING:
GE2014A000078

FRONTAL FIXING PLATE
Fast frontal fixing steel plate for support the drawer's base and to lock the front with the possibility to adjust it horizontally and vertically.

PLAQUE POUR FIXATION FRONTALE
Plaque en acier fixation frontale très rapide pour soutenir la base du tiroir et le blocage de la partie avant avec la possibilité de l'ajuster horizontalement et verticalement.

PLACA PARA FIJACION FRONTAL
Placa de acero con fijacíon rápida frontal para el sostén de la base del cajón y para bloquear el frontal con posibilidad de ajuste horizontal y vertical.

ITEM NUMBER	PAIRS PER BOX	BOX DIMENSION		BOX WEIGHT		STOCK IN AMERICA MSRP PRICING USD	
		mm	inch				
		W x D x H	W x D x H	KG	LB	PAIR	BOX
V540/I/C/R	100	150 x 100 x 100	5 7/8" x 3 7/8" x 3 7/8"	1.35	2.98	4.880	488.000

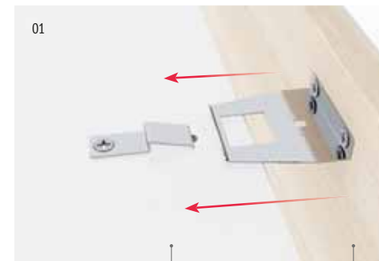

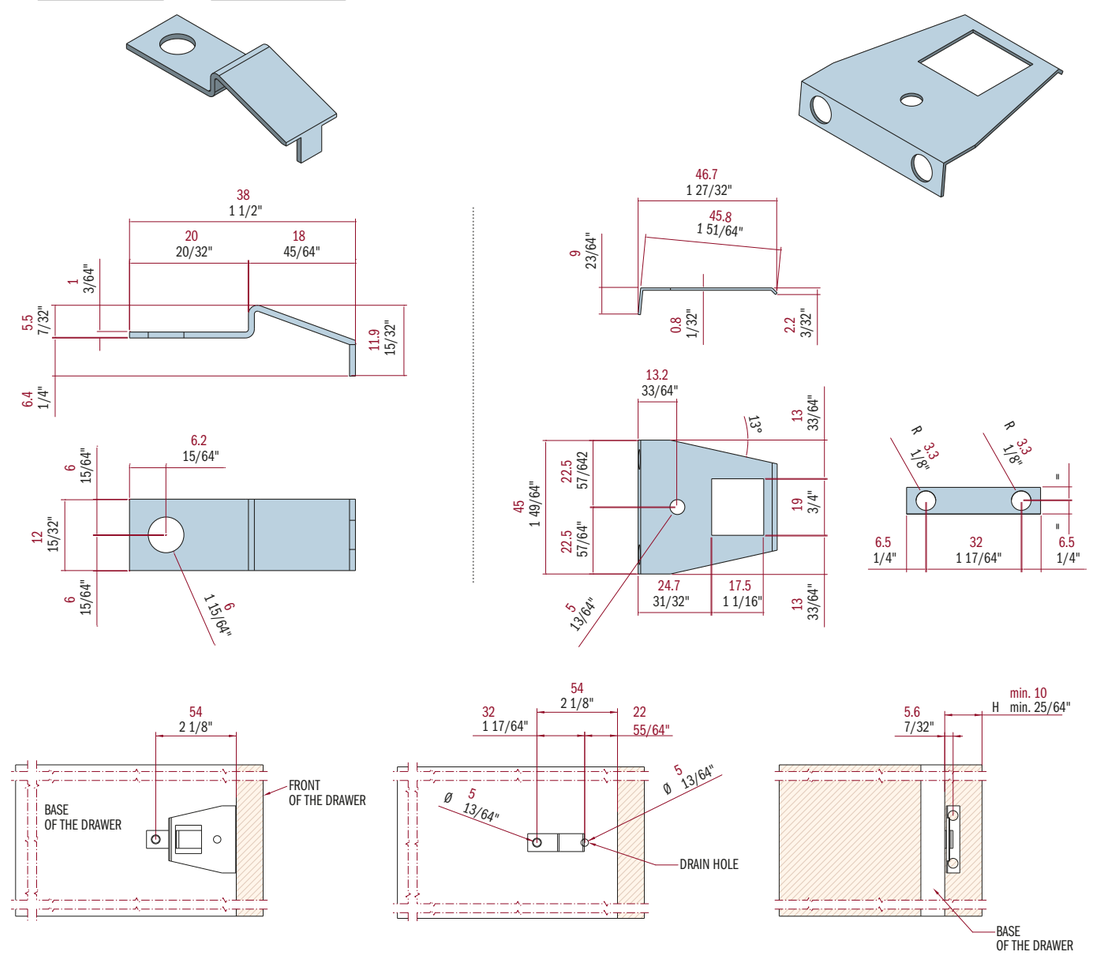

992

PLASTIC WALL FOR SYPHON'S SPACE
Thermoplastic wall for the siphon's space in the washbasin drawer, height 35 mm, Grey Colour.

- This system consists of extruded bar and special terminals so there is the possibility to customize it in size.
- The height of 35 mm will allow the housing of the drawer even under very deep basins.
- Easy to clean.
- Unalterable.
- Protection of the base.

PAROI EN PLASTIQUE POUR ESPACE DE SIPHON
Paroi en matériau thermoplastique pour l'espace du tiroir au-dessous du lavabo, hauteur de 35 mm, couleur gris.

- *Ce système se compose d'une barre extrudée et terminaux spéciaux il y a donc la possibilité de personnaliser la taille.*
- *La hauteur de 35 mm permettra le logement du tiroir, même dans des bassins très profonds.*
- *Facile à nettoyer.*
- *Inaltérable.*
- *Protection de la base.*

PARED EN PLASTICO PARA ESPACIO SIFON
Pared baja para espacio sifón del cajón debajo del fregadero en material termoplástico, color gris.

- Sistema compuesto popr barra estruida y terminales especiales, por lo que es personalizable a la medida.
- La altura de 35 mm permite alojar el cajónincluso debajo de fregaderos muy profundos.
- Limpieza facil.
- Inalterable en el tiempo.
- Protección de la base.

COLORS	ITEM NUMBER	KIT PER BOX	BOX DIMENSION mm W x D x H	BOX DIMENSION inch W x D x H	BOX WEIGHT KG	BOX WEIGHT LB	STOCK IN AMERICA MSRP PRICING USD KIT	STOCK IN AMERICA MSRP PRICING USD BOX
	V992/KIT/1000/9006 KIT = B (1 pcs = 1000mm - 39 3/8") + A (2 pcs) + C (2 pcs)	10	1100 x 160 x 100	43 1/4" x 6 1/4" x 3 7/8"	3.25	7.16	24.149	241.490

COLORS	ITEM NUMBER	KIT PER BOX	BOX DIMENSION mm W x D x H	BOX DIMENSION inch W x D x H	BOX WEIGHT KG	BOX WEIGHT LB	STOCK IN AMERICA MSRP PRICING USD KIT	STOCK IN AMERICA MSRP PRICING USD BOX
	V992/KIT/9006 KIT= A (2 pcs) + C (2 pcs)	10	250 x 180 x 170	9 7/8" x 7 1/8" x 6 3/4"	0.78	1.72	9.426	94.260

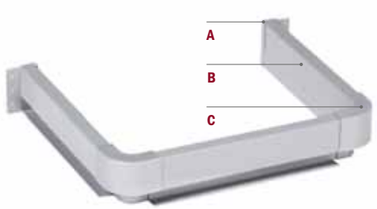

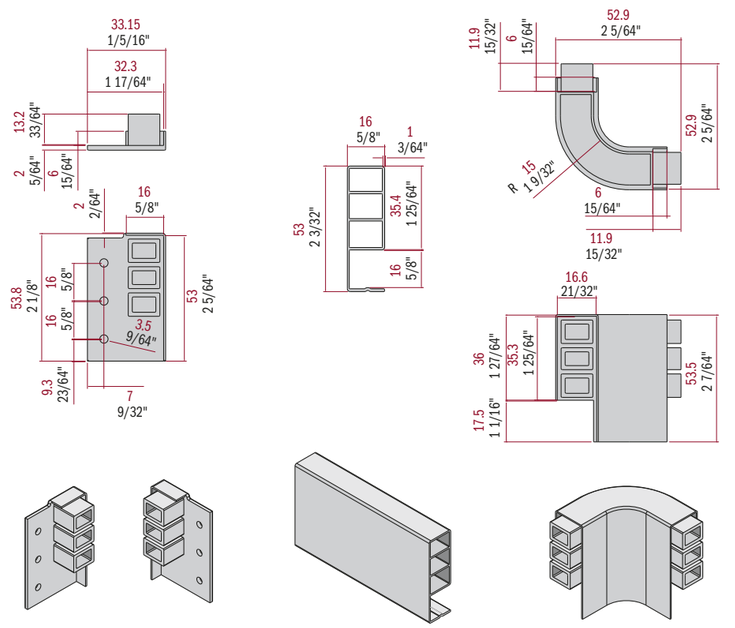

A B C

995

ORGANIZER
Vanity Drawer Organizer System for Siphon Cut Out
- Light Grey
- Anthracite

CONTENEUR DE STOCKAGE
Système d'organisateur de tiroir de vanité pour la coupe de siphon
- Gris Clair
- Anthracite

CONTENEDOR
Sistema de Contenedor Modular de PVC para Cubrir Orificios de Sifón
- Gris Claro
- Antracita

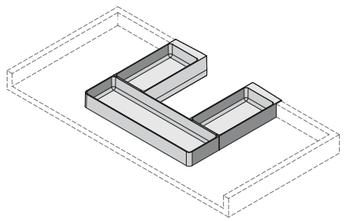

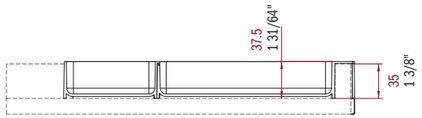

*

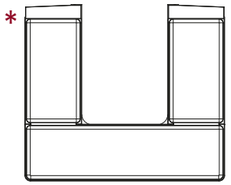

COLORS	ITEM NUMBER	LENGTH mm	LENGTH inch	PCS PER BOX	BOX DIMENSION mm W x D x H	BOX DIMENSION inch W x D x H	BOX WEIGHT KG	BOX WEIGHT LB	STOCK IN AMERICA MSRP PRICING USD EACH	STOCK IN AMERICA MSRP PRICING USD BOX
	V995/250/C4C/C Central Unit			10	500 x 210 x 210	19 5/8" x 8 1/4" x 8 1/4"	2.27	5.00	12.059	120.590
	V995/300/C4C/C Central Unit			10	500 x 210 x 210	19 5/8" x 8 1/4" x 8 1/4"	2.39	5.27	12.809	128.090
	V995/250/GAM/C Central Unit			10	500 x 210 x 210	19 5/8" x 8 1/4" x 8 1/4"	1.95	4.30	12.681	126.810

COLORS	ITEM NUMBER	LENGTH mm	LENGTH inch	PAIRS PER BOX	BOX DIMENSION mm W x D x H	BOX DIMENSION inch W x D x H	BOX WEIGHT KG	BOX WEIGHT LB	STOCK IN AMERICA MSRP PRICING USD PAIR	STOCK IN AMERICA MSRP PRICING USD BOX
	V995/250/C4C/DS L&R Side Units			10	410 x 330 x 210	16 1/8" x 13" x 8 1/4"	2.63	5.80	18.567	185.670
	V995/300/C4C/DS L&R Side Units			10	410 x 330 x 210	16 1/8" x 13" x 8 1/4"	3.10	6.83	19.656	196.560
	V995/250/GAM/DS L&R Side Units			10	410 x 330 x 210	16 1/8" x 13" x 8 1/4"	2.50	5.51	19.172	191.720

*

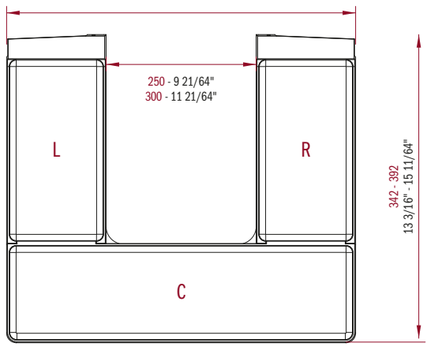

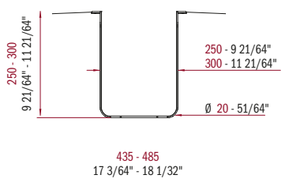

996

ORGANIZER
Plastic Wall for syphon's space. Unique piece
- Light Grey
- Anthracite

CONTENEUR DE STOCKAGE
Paroi en plastique pour l'espace du siphon. Pièce unique
- Gris Clair
- Anthracite

CONTENEDOR
Pared en Plástico para espacio de sifón. Pieza única
- Gris Claro
- Antracita

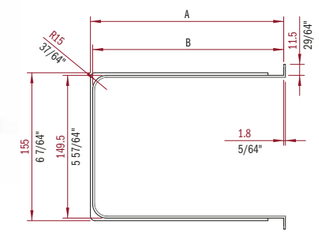

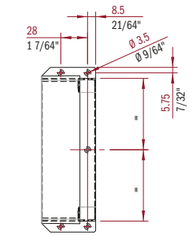

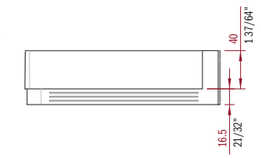

COLORS	ITEM NUMBER	PCS PER BOX	BOX DIMENSION mm W x D x H	BOX DIMENSION inch W x D x H	BOX WEIGHT KG	BOX WEIGHT LB	STOCK IN AMERICA MSRP PRICING USD EACH	STOCK IN AMERICA MSRP PRICING USD BOX
	V996/40/250/C4C	10	380 x 230 x 230	15" x 9" x 9"	1.30	2.87	13.335	133.350
	V996/40/250/GAM	10	380 x 230 x 230	15" x 9" x 9"	1.30	2.87	13.335	133.350

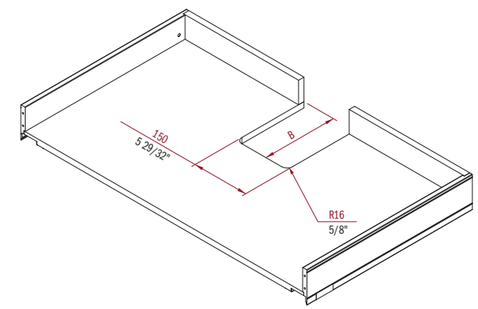

BRACKETS & SUPPORTS

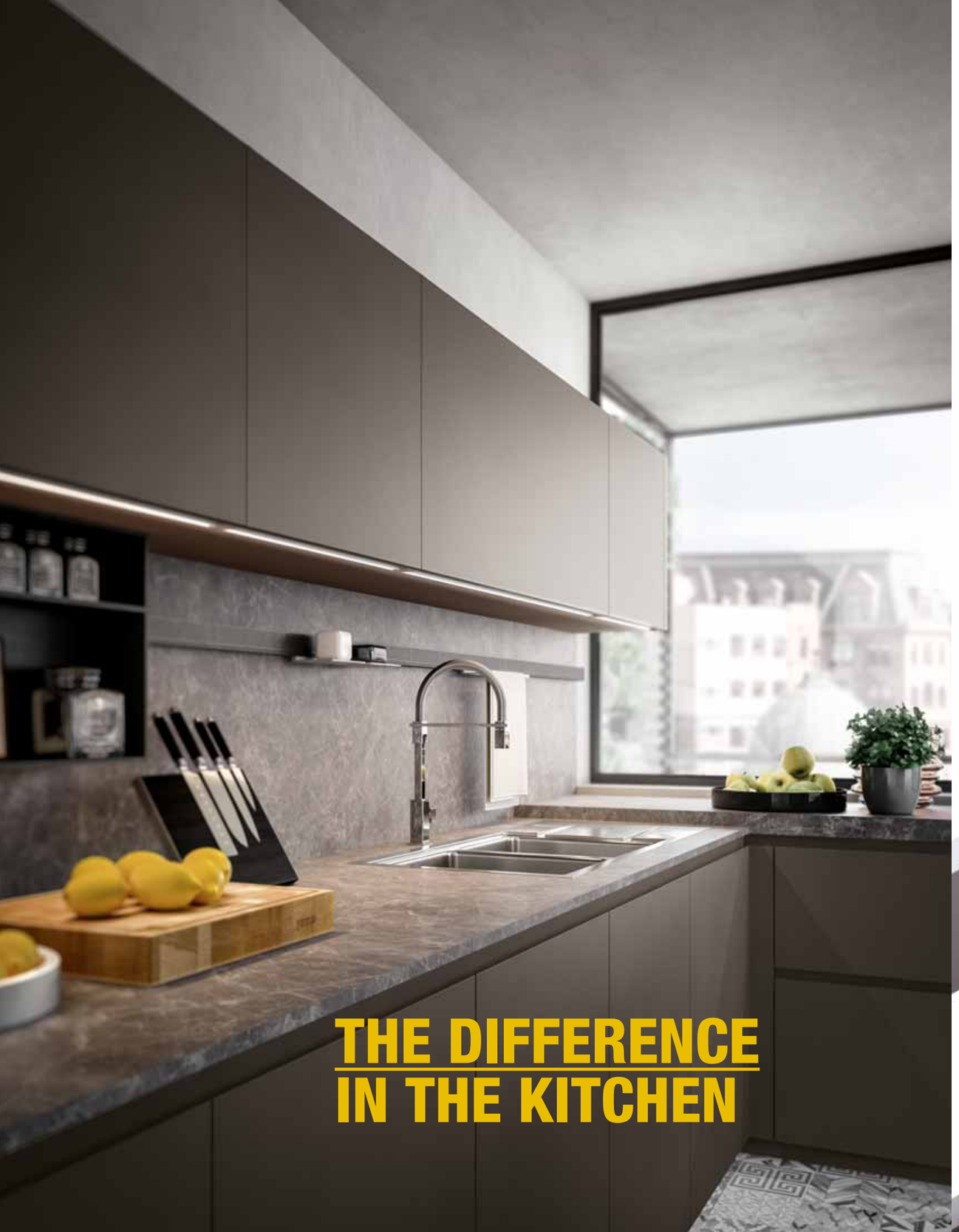

156 162

SUPPORT FOR SUSPENDED BASE CABINET
Galvanized corner reinforced plate with reduced edges and support bar for suspended units.

CORNIERE POUR MUEBLES SUSPENDUS
Cornière renforcée et barre zinguée pour support de meubles suspendus.

SOPORTE PARA MUEBLE BASE SOSPENDIDO
Placa angular de metal zincado con aletas reducidas y placa de soporte para apoyo de muebles suspendidos.

ITEM NUMBER	KIT PER BOX	BOX DIMENSION mm W x D x H	BOX DIMENSION inch W x D x H	BOX WEIGHT KG	BOX WEIGHT LB	STOCK IN AMERICA MSRP PRICING USD KIT	STOCK IN AMERICA MSRP PRICING USD BOX
V156/162	25	300 x 300 x 230	11 3/4" x 11 3/4" x 9"	11.00	24.25	11.143	278.575

One kit contains two pieces of 156 and two pieces of 162.

156

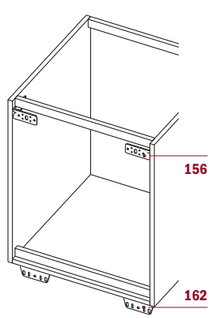

BACK OF THE BASE UNIT

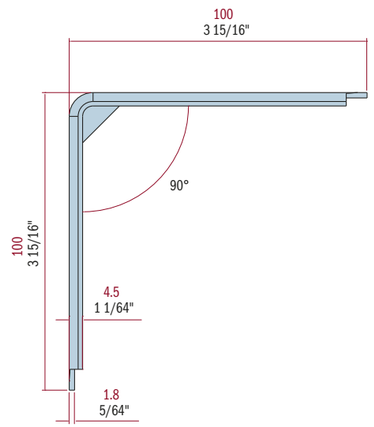

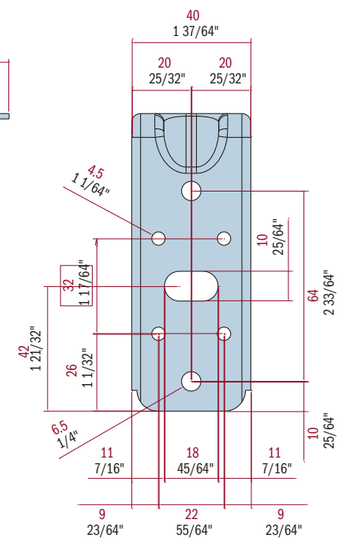

162

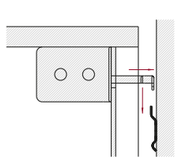

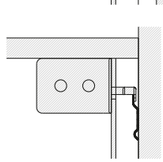

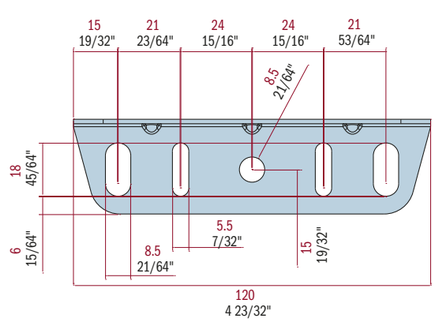

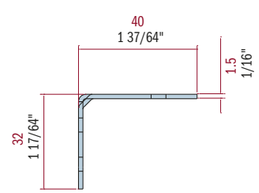

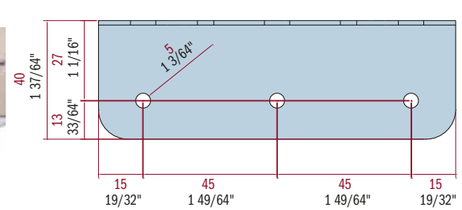

120

ADJUSTABLE HANGING BRACKETS
Adjustable right and left hanging brackets for cabinets, nylon box, with a type A hook for dowel and bar. Screw Fixing.

ATTACHE REGLABLE D'ACCROCHAGE
Attache réglable pour éléments hauts suspendus, avec crochet type A pour cheville et barre, boite en nylon. Vissé.

SOPORTE DE COLGANTES
Enganche para colgantes ajustable, caja de nylon con gancho tipo A para tacos. Para atornillar.

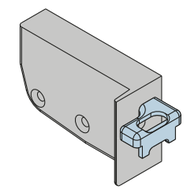

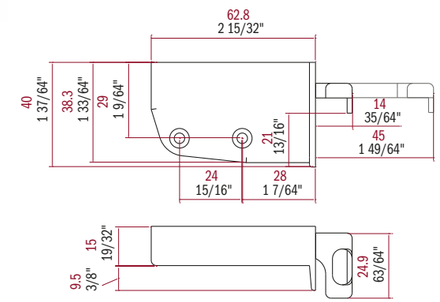

COLORS	ITEM NUMBER	PAIRS PER BOX	BOX DIMENSION mm W x D x H	BOX DIMENSION inch W x D x H	BOX WEIGHT KG	BOX WEIGHT LB	STOCK IN AMERICA MSRP PRICING USD PAIR	STOCK IN AMERICA MSRP PRICING USD BOX
	V120/C4B/DX/SX LIGHT GREY	50	280 x 280 x 210	11" x 11" x 8 1/4"	5.86	12.92	3.867	193.350

122

ADJUSTABLE HANGING BRACKETS
Adjustable right and left hanging brackets for cabinets, nylon box, with a type A hook for dowel. Doweled.

ATTACHE REGLABLE D'ACCROCHAGE
Attache réglable pour éléments hauts suspendus, avec crochet type A pour cheville, boite en nylon. Chevillé.

SOPORTE DE COLGANTES
Enganche para colgantes ajustable, caja de nylon con gancho tipo A para tacos. Para tetones.

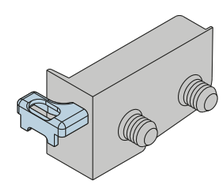

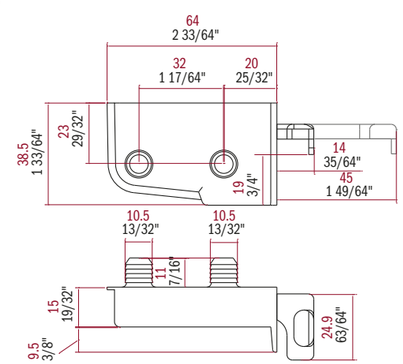

COLORS	ITEM NUMBER	PAIRS PER BOX	BOX DIMENSION mm W x D x H	BOX DIMENSION inch W x D x H	BOX WEIGHT KG	BOX WEIGHT LB	STOCK IN AMERICA MSRP PRICING USD PAIR	STOCK IN AMERICA MSRP PRICING USD BOX
	V122/C4B/DX/SX LIGHT GREY	50	280 x 280 x 210	11" x 11" x 8 1/4"	6.00	13.23	3.867	193.350

148 1

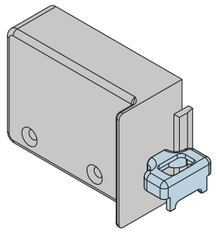

ADJUSTABLE HANGING BRACKETS
Frontally adjustable right and left hanging brackets for cabinets, nylon box. Even though both regulator screws allow the two positions to be regulated, they still remain in the same place. Furthermore, the vertical regulator screw slanted for better adjustment. Screw Fixing.

ATTACHE REGLABLE D'ACCROCHAGE
Attache pour éléments hauts suspendus D et G, à réglage frontal, fixation par vis, boite en nylon. Les deux vis restent dans leur position même si sont utilisées pour faire les deux réglages. La vis pour le réglage vertical est en position oblique afin de permettre de mieux l'ajuster. Vissé.

SOPORTE DE COLGANTES
Enganche para colgantes ajustable frontalmente, caja de Nylon, fijaciòn con tornillo. Ambos tornillos de adjuste tienen las dos regolaciones, pero permanecen siempre en la misma posiciòn. Ademàs, el tornillo de calibracioòn vertical està olocado enclinado para mejorar el ajuste. Para atornillar.

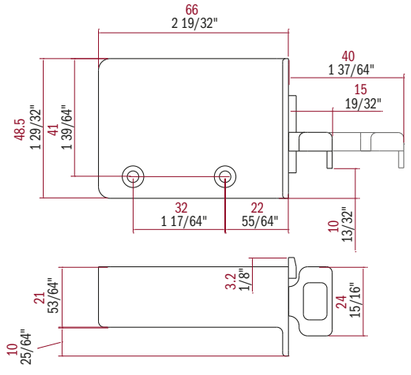

COLORS	ITEM NUMBER		PAIRS PER BOX	BOX DIMENSION mm W x D x H	BOX DIMENSION inch W x D x H	BOX WEIGHT KG	BOX WEIGHT LB	STOCK IN AMERICA MSRP PRICING USD PAIR	STOCK IN AMERICA MSRP PRICING USD BOX
	V148/1/DX/SX/W	WHITE	50	390 x 390 x 260	15 3/8" x 15 3/8" x 10 1/4"	9.85	21.72	9.640	482.000
	V148/1/DX/SX	LIGHT GREY	50	390 x 390 x 260	15 3/8" x 15 3/8" x 10 1/4"	9.85	21.72	9.640	482.000

148 2

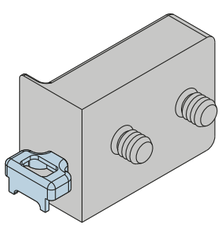

ADJUSTABLE HANGING BRACKETS
Frontally adjustable right and left hanging brackets for cabinets, nylon box. Even though both regulator screws allow the two positions to be regulated, they still remain in the same place. Furthermore, the vertical regulator screw slanted for better adjustment. Doweled.

Pins d. 10mm, pos. 20-23.

ATTACHE REGLABLE D'ACCROCHAGE
Attache pour éléments hauts suspendus D et G, à réglage frontal, fixation par cheville, boite en nylon. Les deux vis restent dans leur position même si sont utilisées pour faire les deux réglages. La vis pour le réglage vertical est en position oblique afin de permettre de mieux l'ajuster. Chevillé.

Goujons d.10mm, pos. 20-23.

SOPORTE DE COLGANTES
Enganche para colgantes ajustable frontalmente, caja de Nylon, fijaciòn con tetones.
Ambos tornillos de adjuste tienen las dos regolaciones, pero permanecen siempre en la misma posiciòn. Ademàs, el tornillo de calibracioòn vertical està colocado enclinado para mejorar el ajuste. Para tetones.

Pernos diámetro 10, posición 20-23.

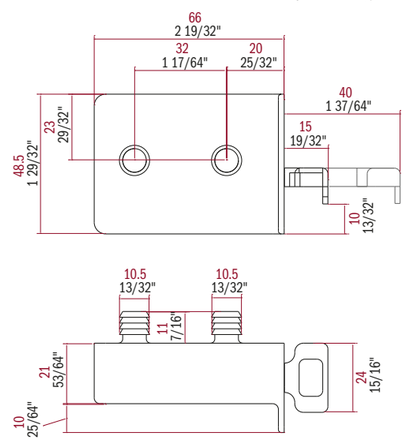

COLORS	ITEM NUMBER		PAIRS PER BOX	BOX DIMENSION mm W x D x H	BOX DIMENSION inch W x D x H	BOX WEIGHT KG	BOX WEIGHT LB	STOCK IN AMERICA MSRP PRICING USD PAIR	STOCK IN AMERICA MSRP PRICING USD BOX
	V148/2/DX/SX/W	WHITE	50	390 x 390 x 260	15 3/8" x 15 3/8" x 10 1/4"	10.22	22.53	9.640	482.000
	V148/2/DX/SX	LIGHT GREY	50	390 x 390 x 260	15 3/8" x 15 3/8" x 10 1/4"	10.22	22.53	9.640	482.000

151

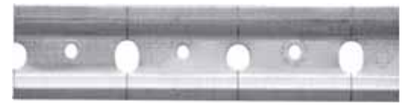

SUPPORT METAL BAR
Galvanized metal hanging bar with one back plate.

BARRE D'ACCROCHAGE
Barre d'accrochage zinguée avec un bord.

BARRA DE ENGANCHE
Barra para colgar colgantes de metal galvanizado y un borde.

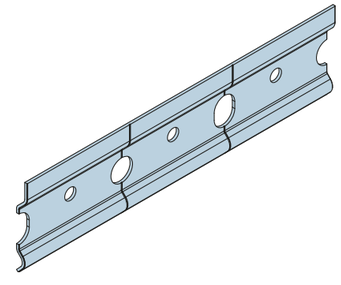

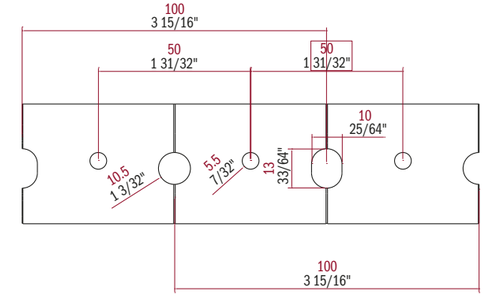

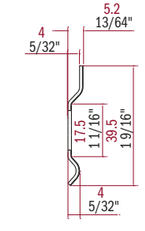

ITEM NUMBER	LENGTH mm	LENGTH inch	PCS PER BOX	BOX DIMENSION mm W x D x H	BOX DIMENSION inch W x D x H	BOX WEIGHT KG	BOX WEIGHT LB	STOCK IN AMERICA MSRP PRICING USD EACH	STOCK IN AMERICA MSRP PRICING USD BOX
V151/02	2000	78 3/4"	25	2100 x 80 x 60	82 5/8" x 3 1/8" x 2 3/8"	20.00	44.09	13.173	329.325

242 245

SHELF HOLDER
Shelf-support to be inserted in, with blocking cover piece, complete with a diam. 5 mm pin.
Light Grey.

PORTE-ETAGERES
Porte-étagère en nylon à emboîtement, avec fenêtre de blocage complète de goujon en métal de 5 mm.
Gris clair.

APOYOS DE PLANOS
Apoyo de plano de insercion con ventana de bloqueo, con perno diam. 5 mm de metal.
Gris claro.

242

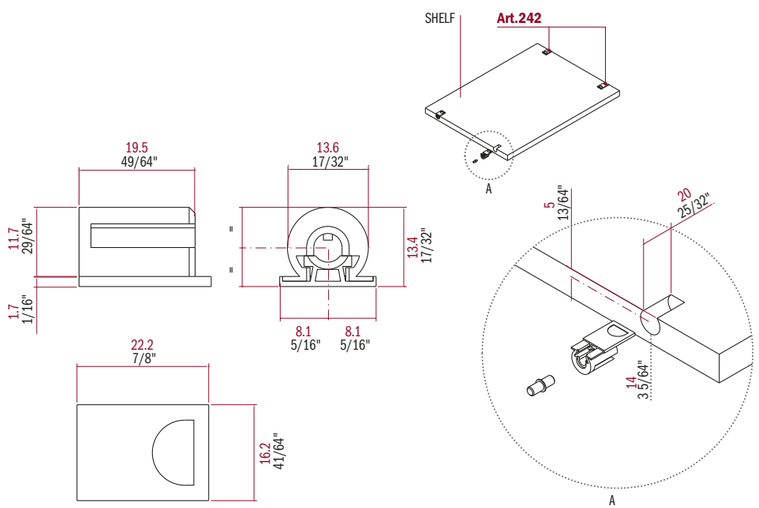

245

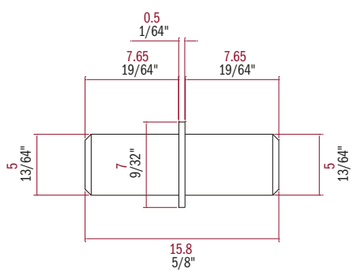

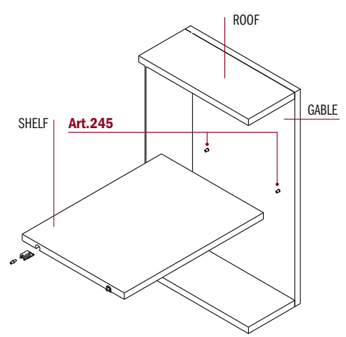

	ITEM NUMBER	PAIRS PER BOX	BOX DIMENSION mm W x D x H	BOX DIMENSION inch W x D x H	BOX WEIGHT KG	BOX WEIGHT LB	STOCK IN AMERICA MSRP PRICING USD PAIR	STOCK IN AMERICA MSRP PRICING USD BOX
	V242/L/CGR/245/M LIGHT GREY	500	250 x 170 x 170	9 7/8" x 6 3/4" x 6 3/4"	2.30	5.07	0.771	385.500

One pair is composed of one piece of 242 and one piece of 245.

528

GLASS SHELF HOLDER
Nickel-plated zamak shelf-support for glass shelves up to 10 mm with a 5 mm pin and extractable blocking piece by push-button.

PORTE ETAGERE EN VERRE
Porte étagère galvanisé, pour étagères en verre avec épaisseur jusqu'à 10 mm, avec languette de blocage extractible - bouton pour le décrochage. Pivot Ø 5 mm.

APOYO PARA PLANO DE CRISTAL
Apoyo de plano en zamak niquelado para cristales hasta 10 mm con lengueta de bloqueo extraible, desenganche y pulsador perno diam. 5 mm.

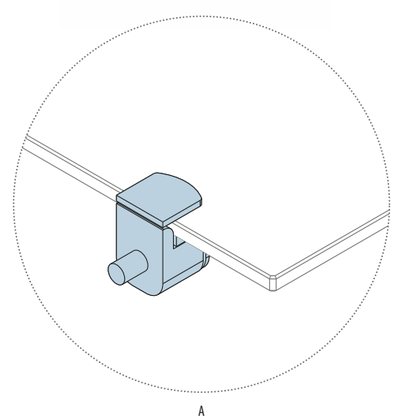

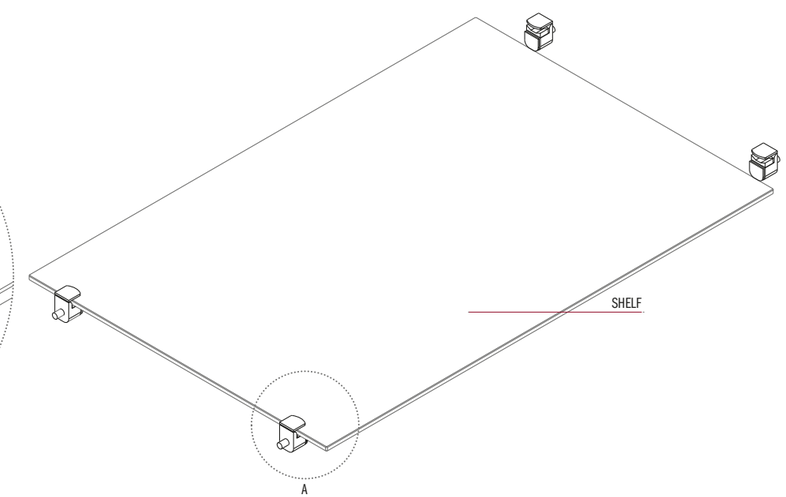

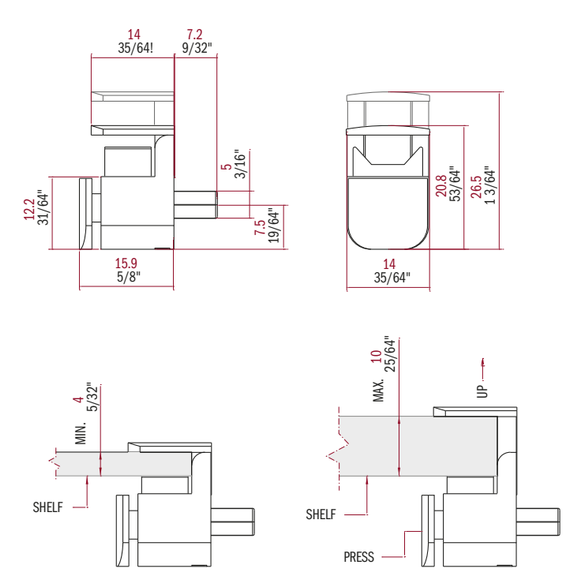

ITEM NUMBER	PCS PER BOX	BOX DIMENSION mm W x D x H	BOX DIMENSION inch W x D x H	BOX WEIGHT KG	BOX WEIGHT LB	STOCK IN AMERICA MSRP PRICING USD EACH	STOCK IN AMERICA MSRP PRICING USD BOX
V528	500	250 x 250 x 100	9 7/8" x 9 7/8" x 3 7/8"	8.30	18.30	1.492	746.000
V528/60	60	145 x 95 x 90	5 3/4" x 3 3/4" x 3 1/2"	0.95	2.09	1.955	117.300

ALUMINIUM STRUCTURES

Assembly Instructions

7711

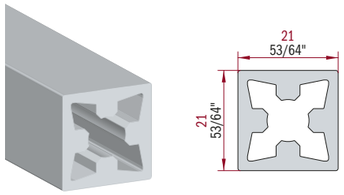

ALUMINUM UPRIGHT PROFILE FOR SHELVING STRUCTURES
50S Aluminum Clear Anodize
S2I Aluminum Titanium Anodize
V12 Aluminum Black Matt Powder Coated

PROFILÉ VERTICAL EN ALUMINIUM POUR STRUCTURES ÉTAGÈRE
50S Aluminium Clair Anodisé
S2I Aluminium Titanium Anodize
V12 Aluminium Noir Opaque Vernie

PERFIL DE MONTAJE VERTICAL DE ALUMINIO PARA ESTRUCTURAS MODULARES
50S Aluminio Anodizado Claro
S2I Aluminio Anodizado Titanio
V12 Aluminio Negro Mate Barnizado

COLORS	ITEM NUMBER	LENGTH mm	LENGTH inch	PCS PER BOX	BOX DIMENSION mm W x D x H	BOX DIMENSION inch W x D x H	BOX WEIGHT KG	BOX WEIGHT LB	STOCK IN AMERICA MSRP PRICING USD METER	FOOT	EACH	BOX
50S	UR771150SL27	2670	105 1/8"	5	2740 x 150 x 50	107 7/8" x 5 7/8" x 2"	11.50	25.35	30.248	9.220	80.762	403.811
50S	UR771150SL41	4100	161 7/16"	5	4250 x 150 x 50	167 3/8" x 5 7/8" x 2"	15.00	33.07	26.600	8.108	109.060	545.300
S2I	UR7711S2IL27	2670	105 1/8"	5	2740 x 150 x 50	107 7/8" x 5 7/8" x 2"	11.50	25.35	32.713	9.971	87.344	436.719
S2I	UR7711S2IL41	4100	161 7/16"	5	4250 x 150 x 50	167 3/8" x 5 7/8" x 2"	15.00	33.07	30.887	9.414	126.637	633.184
V12	UR7711V12L27	2670	105 1/8"	5	2740 x 150 x 50	107 7/8" x 5 7/8" x 2"	11.50	25.35	30.719	9.363	82.020	410.099
V12	UR7711V12L41	4100	161 7/16"	5	4250 x 150 x 50	167 3/8" x 5 7/8" x 2"	15.00	33.07	26.449	8.062	108.441	542.205

7712

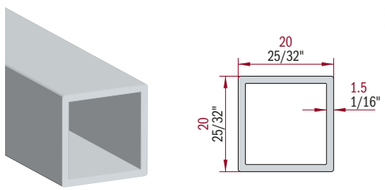

ALUMINUM LATERAL PROFILE FOR SHELVING STRUCTURES
50S Aluminum Clear Anodize
S2I Aluminum Titanium Anodize
V12 Aluminum Black Matt Powder Coated

PROFILÉ LATÉRAL EN ALUMINIUM POUR STRUCTURES ÉTAGÈRE
50S Aluminium Clair Anodisé
S2I Aluminium Titanium Anodize
V12 Aluminium Noir Opaque Vernie

PERFIL A TRAVÉS DE ALUMINIO PARA ESTRUCTURAS MODULARES
50S Aluminio Anodizado Claro
S2I Aluminio Anodizado Titanio
V12 Aluminio Negro Mate Barnizado

COLORS	ITEM NUMBER	LENGTH mm	LENGTH inch	PCS PER BOX	BOX DIMENSION mm W x D x H	BOX DIMENSION inch W x D x H	BOX WEIGHT KG	BOX WEIGHT LB	STOCK IN AMERICA MSRP PRICING USD METER	FOOT	EACH	BOX
50S	UR771250SL27	2670	105 1/8"	5	2740 x 150 x 50	107 7/8" x 5 7/8" x 2"	5.00	11.02	20.481	6.243	54.684	273.421
50S	UR771250SL41	4100	161 7/16"	5	4250 x 150 x 50	167 3/8" x 5 7/8" x 2"	7.00	15.43	17.661	5.383	72.410	362.051
S2I	UR7712S2IL27	2670	105 1/8"	5	2740 x 150 x 50	107 7/8" x 5 7/8" x 2"	5.00	11.02	22.947	6.994	61.268	306.342
S2I	UR7712S2IL41	4100	161 7/16"	5	4250 x 150 x 50	167 3/8" x 5 7/8" x 2"	7.00	15.43	21.854	6.661	89.601	448.007
V12	UR7712V12L27	2670	105 1/8"	5	2740 x 150 x 50	107 7/8" x 5 7/8" x 2"	5.00	11.02	20.953	6.386	55.945	279.723
V12	UR7712V12L41	4100	161 7/16"	5	4250 x 150 x 50	167 3/8" x 5 7/8" x 2"	.00	15.43	17.510	5.337	71.791	358.955

7713

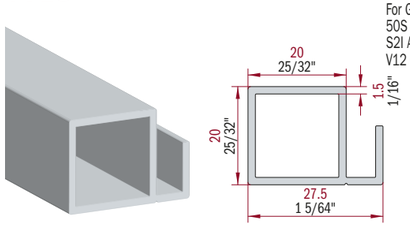

ALUMINUM FRONT & REAR PROFILE FOR SHELVING STRUCTURES
For Glass and Wood Shelves
50S Aluminum Clear Anodize
S2I Aluminum Titanium Anodize
V12 Aluminum Black Matt Powder Coated

PROFILÉ AVANT & ARRIÈRE EN ALUMINIUM POUR STRUCTURES ÉTAGÈRE
Pour les étagères en verre et en bois
50S Aluminium Clair Anodisé
S2I Aluminium Titanium Anodize
V12 Aluminium Noir Mat Peint à Poudre

PERFIL A TRAVÉS DE ALUMINIO PARA ESTRUCTURAS MODULARES
Para estantes de vidrio y madera
50S Aluminio Anodizado Claro
S2I Aluminio Anodizado Titanio
V12 Aluminio Negro Mate Barnizado

COLORS	ITEM NUMBER	LENGTH mm	LENGTH inch	PCS PER BOX	BOX DIMENSION mm W x D x H	BOX DIMENSION inch W x D x H	BOX WEIGHT KG	BOX WEIGHT LB	STOCK IN AMERICA MSRP PRICING USD METER	FOOT	EACH	BOX
50S	UR771350SL27	2670	105 1/8"	5	2740 x 150 x 50	107 7/8" x 5 7/8" x 2"	6.50	14.33	22.207	6.769	59.293	296.463
50S	UR771350SL41	4100	161 7/16"	5	4250 x 150 x 50	167 3/8" x 5 7/8" x 2"	9.00	19.84	18.951	5.776	77.699	388.496
S2I	UR7713S2IL27	2670	105 1/8"	5	2740 x 150 x 50	107 7/8" x 5 7/8" x 2"	6.50	14.33	24.672	7.520	65.874	329.371
S2I	UR7713S2IL41	4100	161 7/16"	5	4250 x 150 x 50	167 3/8" x 5 7/8" x 2"	9.00	19.84	23.238	7.083	95.276	476.379
V12	UR7713V12L27	2670	105 1/8"	5	2740 x 150 x 50	107 7/8" x 5 7/8" x 2"	6.50	14.33	22.678	6.912	60.550	302.751
V12	UR7713V12L41	4100	161 7/16"	5	4250 x 150 x 50	167 3/8" x 5 7/8" x 2"	9.00	19.84	18.800	5.730	77.080	385.400

CEP

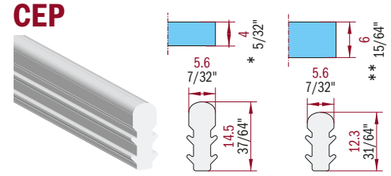

GASKET FOR GLASS SHELVES
* For 4mm - 5/32" glass
** For 6mm - 1/4" glass

JOINT D'ÉTANCHÈITÉ POUR ÉTAGÈRE EN VERRE
** Pour verre de 4mm - 5/32"*
*** Pour verre de 6mm - 1/4"*

JUNTA PARA ESTANTES DE VIDRIO
* Para de vidrio 4mm - 5/32"
** Para de vidrio 6mm - 1/4"

COLORS	ITEM NUMBER	LENGTH mm	LENGTH inch	PCS PER BOX	BOX DIMENSION mm W x D x H	BOX DIMENSION inch W x D x H	BOX WEIGHT KG	BOX WEIGHT LB	STOCK IN AMERICA MSRP PRICING USD METER	FOOT	EACH	BOX
*	URCEP0038-01	40000	1574 13/16"	1	460 x 170 x 120	18 1/8" x 6 3/4" x 4 3/4"	4.00	8.82	5.362	1.634	214.480	214.480
**	URCEP0039-01	40000	1574 13/16"	1	460 x 170 x 120	18 1/8" x 6 3/4" x 4 3/4"	3.30	7.28	5.362	1.634	214.480	214.480

7715

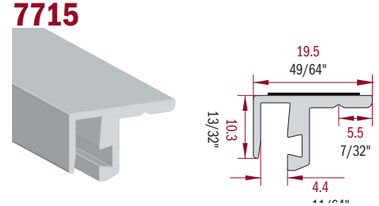

UPPER PROFILE IN ALUMINUM FOR THE CREATION OF LATERAL AND REAR CLOSURES FOR THE SHELVING STRUCTURE.
To be used with URCEP0037-01 gasket (not included).
With pre-installed double-sided tape
50S Aluminum Clear Anodize
S2I Aluminum Titanium Anodize
V12 Aluminum Black Matt Powder Coated

UPPER PROFILE IN ALUMINUM FOR THE CREATION OF LATERAL AND REAR CLOSURES FOR THE SHELVING STRUCTURE.
TO BE USED WITH URCEP0037-01 GASKET (NOT INCLUDED).
WITH PRE-INSTALLED DOUBLE-SIDED TAPE
50S ALUMINUM CLEAR ANODIZE
S2I ALUMINUM TITANIUM ANODIZE
V12 ALUMINUM BLACK MATT POWDER COATED

PERFIL SUPERIOR EN ALUMINIO PARA LA CREACIÓN DE CIERRES LATERALES Y TRASEROS PARA LA ESTRUCTURA DE ESTANTERÍAS.
Para ser utilizado con la junta URCEP0037-01 (no incluida).
Con cinta de doble cara preinstalada
50S Aluminio Anodizado Claro
S2I Aluminio Anodizado Titanio
V12 Aluminio Negro Mate Barnizado

COLORS	ITEM NUMBER	LENGTH mm	LENGTH inch	PCS PER BOX	BOX DIMENSION mm W x D x H	BOX DIMENSION inch W x D x H	BOX WEIGHT KG	BOX WEIGHT LB	STOCK IN AMERICA MSRP PRICING USD METER	FOOT	EACH	BOX
50S	UR771550SL27	2670	105 1/8"	5	2740 x 150 x 50	107 7/8" x 5 7/8" x 2"	5.50	12.13	21.683	6.609	57.894	289.468
50S	UR771550SL41	4100	161 7/16"	5	4250 x 150 x 50	167 3/8" x 5 7/8" x 2"	7.80	17.20	17.553	5.350	71.967	359.837
S2I	UR7715S2IL27	2670	105 1/8"	5	2740 x 150 x 50	107 7/8" x 5 7/8" x 2"	5.50	12.13	36.529	11.134	97.532	487.662
S2I	UR7715S2IL41	4100	161 7/16"	5	4250 x 150 x 50	167 3/8" x 5 7/8" x 2"	7.80	17.20	20.354	6.204	83.451	417.257
V12	UR7715V12L27	2670	105 1/8"	5	2740 x 150 x 50	107 7/8" x 5 7/8" x 2"	5.50	12.13	22.752	6.935	60.748	303.739
V12	UR7715V12L41	4100	161 7/16"	5	4250 x 150 x 50	167 3/8" x 5 7/8" x 2"	7.80	17.20	17.677	5.388	72.476	362.379

7716

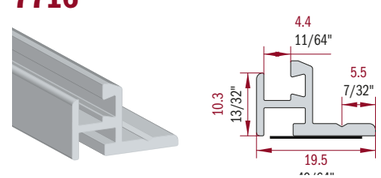

ALUMINUM LOWER PROFILE FOR CREATING LATERAL AND REAR CLOSURES FOR THE SHELVING STRUCTURE.
To be used with URCEP0037-01 gasket (not included).
With pre-installed double-sided tape
50S Aluminum Clear Anodize
S2I Aluminum Titanium Anodize
V12 Aluminum Black Matt Powder Coated

PROFIL INFÉRIEUR EN ALUMINIUM POUR CRÉER DES FERMETURES LATÉRALES ET ARRIÈRE POUR LA STRUCTURE DE RAYONNAGE.
À utiliser avec le joint URCEP0037-01 (non inclus).
Avec du ruban adhésif double face préinstallé
50S Aluminium Clair Anodisé
S2I Aluminium Titanium Anodize
V12 Aluminium Noir Opaque Vernie

PERFIL INFERIOR DE ALUMINIO PARA CREAR CIERRES LATERALES Y TRASEROS PARA LA ESTRUCTURA DE ESTANTERÍAS.
Para ser utilizado con la junta URCEP0037-01 (no incluida).
Con cinta de doble cara preinstalada
50S Aluminio Anodizado Claro
S2I Aluminio Anodizado Titanio
V12 Aluminio Negro Mate Barnizado

COLORS	ITEM NUMBER	LENGTH mm	LENGTH inch	PCS PER BOX	BOX DIMENSION mm W x D x H	BOX DIMENSION inch W x D x H	BOX WEIGHT KG	BOX WEIGHT LB	STOCK IN AMERICA MSRP PRICING USD METER	FOOT	EACH	BOX
50S	UR771650SL27	2670	105 1/8"	5	2740 x 150 x 50	107 7/8" x 5 7/8" x 2"	5.50	12.13	21.392	6.520	57.117	285.583
50S	UR771650SL41	4100	161 7/16"	5	4250 x 150 x 50	167 3/8" x 5 7/8" x 2"	7.80	17.20	17.205	5.244	70.541	352.703
S2I	UR7716S2IL27	2670	105 1/8"	5	2740 x 150 x 50	107 7/8" x 5 7/8" x 2"	5.50	12.13	36.000	10.973	96.120	480.600
S2I	UR7716S2IL41	4100	161 7/16"	5	4250 x 150 x 50	167 3/8" x 5 7/8" x 2"	7.80	17.20	20.006	6.098	82.025	410.123
V12	UR7716V12L27	2670	105 1/8"	5	2740 x 150 x 50	107 7/8" x 5 7/8" x 2"	5.50	12.13	22.461	6.846	59.971	299.854
V12	UR7716V12L41	4100	161 7/16"	5	4250 x 150 x 50	167 3/8" x 5 7/8" x 2"	7.80	17.20	17.328	5.282	71.045	355.224

CEP

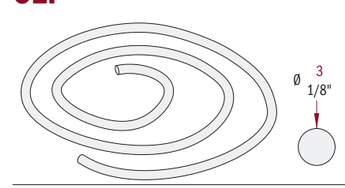

ROUND SEAL FOR FIXING THE REAR AND SIDE CLOSURES.
To be used with profiles 7715 and 7716.
In rolls of 40 meters

JOINT ROND POUR FIXER LES FERMETURES ARRIÈRE ET LATÉRALES.
A utiliser avec les profilés 7715 et 7716.
En rouleaux de 40 mètres

SELLO REDONDO PARA LA FIJACIÓN DE LOS CIERRES TRASEROS Y LATERALES.
Para ser utilizado con los perfiles 7715 y 7716.
En rollos de 40 metros

ITEM NUMBER	LENGTH mm	LENGTH inch	PCS PER BOX	BOX DIMENSION mm W x D x H	BOX DIMENSION inch W x D x H	BOX WEIGHT KG	BOX WEIGHT LB	STOCK IN AMERICA MSRP PRICING USD METER	FOOT	EACH	BOX
URCEP0037-01	40000	1574 13/16"	1	220 x 190 x 160	8 5/8" x 7 1/2" x 6 1/4"	0.70	1.54	1.316	0.401	52.640	52.640

7717

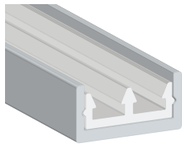

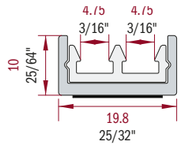

ALUMINUM PROFILE FOR THE REALIZATION OF SLIDING DOORS FOR THE SHELVING STRUCTURE.
Seal included.
With pre-installed double-sided tape.
50S Aluminum Clear Anodize
S2I Aluminum Titanium Anodize
V12 Aluminum Black Matt Powder Coated

PROFIL EN ALUMINIUM POUR LA RÉALISATION DE PORTES COULISSANTES POUR LA STRUCTURE DE RAYONNAGE.
Joint inclus.
Avec du ruban adhésif double face préinstallé
50S Aluminium Clair Anodisé
S2I Aluminium Titanium Anodize
V12 Aluminium Noir Opaque Vernie

PERFIL DE ALUMINIO PARA LA REALIZACIÓN DE PUERTAS CORREDERAS PARA LA ESTRUCTURA DE ESTANTERÍAS.
Sello incluido.
Con cinta de doble cara preinstalada
50S Aluminio Anodizado Claro
S2I Aluminio Anodizado Titanio
V12 Aluminio Negro Mate Barnizado

COLORS	ITEM NUMBER	LENGTH mm	LENGTH inch	PCS PER BOX	BOX DIMENSION mm W x D x H	BOX DIMENSION inch W x D x H	BOX WEIGHT KG	BOX WEIGHT LB	STOCK IN AMERICA MSRP PRICING USD METER	FOOT	EACH	BOX
50S	UR771750SL27	2670	105 1/8"	5	2740 x 150 x 50	107 7/8" x 5 7/8" x 2"	3.50	7.72	24.146	7.360	64.470	322.349
50S	UR771750SL41	4100	161 7/16"	5	4250 x 150 x 50	167 3/8" x 5 7/8" x 2"	4.65	10.25	20.824	6.347	85.378	426.892
S2I	UR7717S2IL27	2670	105 1/8"	5	2740 x 150 x 50	107 7/8" x 5 7/8" x 2"	3.50	7.72	38.992	11.885	104.109	520.543
S2I	UR7717S2IL41	4100	161 7/16"	5	4250 x 150 x 50	167 3/8" x 5 7/8" x 2"	4.65	10.25	22.843	6.963	93.656	468.282
V12	UR7717V12L27	2670	105 1/8"	5	2740 x 150 x 50	107 7/8" x 5 7/8" x 2"	3.50	7.72	25.215	7.686	67.324	336.620
V12	UR7717V12L41	4100	161 7/16"	5	4250 x 150 x 50	167 3/8" x 5 7/8" x 2"	4.65	10.25	20.167	6.147	82.685	413.424

CLA0138

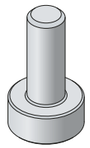

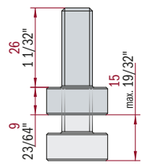

ALUMINUM LEVELER
FOR SHELVING STRUCTURES
50S Aluminum Clear Anodize

NIVELEUR EN ALUMINIUM
POUR STRUCTURES ÉTAGÈRE
50S Aluminium Clair Anodisé

NIVELADOR EN ALUMINIO
PARA ESTRUCTURAS MODULARES
50S Aluminio Anodizado Claro

COLORS	ITEM NUMBER	PCS PER BOX	BOX DIMENSION mm W x D x H	BOX DIMENSION inch W x D x H	BOX WEIGHT KG	BOX WEIGHT LB	STOCK IN AMERICA MSRP PRICING USD EACH	BOX
	URCLA0138	10	150 x 100 x 90	5 7/8" x 3 7/8" x 3 1/2"	1.00	2.20	12.195	121.950

CLF0061

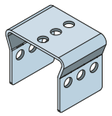

JIG FOR DRILLING ALUMINUM STRUCTURE PROFILES 7711

GABARIT POUR PERCER LES PROFILÉS EN ALUMINIUM 7711

PLANTILLA PARA PERFIL VERTICAL 7711

COLORS	ITEM NUMBER	PCS PER BOX	BOX DIMENSION mm W x D x H	BOX DIMENSION inch W x D x H	BOX WEIGHT KG	BOX WEIGHT LB	STOCK IN AMERICA MSRP PRICING USD EACH	BOX
	URCLF0061	5	150 x 100 x 90	5 7/8" x 3 7/8" x 3 1/2"	0.50	1.10	16.548	82.740

CSP0224

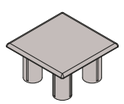

PLASTIC CAP FOR UPRIGHT PROFILE 7711
53A - Color Match for 50S
52A - Color Match for S2I
06 - Color Match for V12

EMBOUT EN PLASTIQUE POUR PROFILÉ 7711
53A - Couleur Correspondante pour 50S
52A - Couleur Correspondante pour S2I
06 - Couleur Correspondante pour V12

TAPA PLÁSTICA PARA PERFIL VERTICAL 7711
53A - Ajuste de Color 50S
52A - Ajuste de Color S2I
06 - Ajuste de Color V12

COLORS	ITEM NUMBER	PCS PER BOX	BOX DIMENSION mm W x D x H	BOX DIMENSION inch W x D x H	BOX WEIGHT KG	BOX WEIGHT LB	STOCK IN AMERICA MSRP PRICING USD EACH	BOX
53A	URCSP0224-53A	50	150 x 100 x 90	5 7/8" x 3 7/8" x 3 1/2"	0.181	0.40	2.666	133.300
52A	URCSP0224-52A	50	150 x 100 x 90	5 7/8" x 3 7/8" x 3 1/2"	0.181	0.40	2.666	133.300
06	URCSP0224-06	50	150 x 100 x 90	5 7/8" x 3 7/8" x 3 1/2"	0.181	0.40	1.383	69.150

VSTP10X12EI

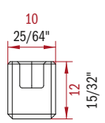

GRUB SCREW FOR ADJUSTING THE LEVEL OF THE SHELF STRUCTURE.
For use with the UFASW08X150ZP angled screw

VIS SANS TÊTE POUR RÉGLER LE NIVEAU DE LA STRUCTURE DE L'ÉTAGÈRE.
À utiliser avec la vis coudée UFASW08X150ZP

TORNILLO SIN CABEZA PARA AJUSTAR EL NIVEL DE LA ESTRUCTURA DEL ESTANTE.
Para usar con el tornillo en ángulo UFASW08X-150ZP

ITEM NUMBER	PCS PER BOX	BOX DIMENSION mm W x D x H	BOX DIMENSION inch W x D x H	BOX WEIGHT KG	BOX WEIGHT LB	STOCK IN AMERICA MSRP PRICING USD EACH	BOX
UVSTB10X12EI	100	145 x 95 x 85	5 3/4" x 3 3/4" x 3 3/8"	0.50	1.10	0.612	61.200

KIT 20X20

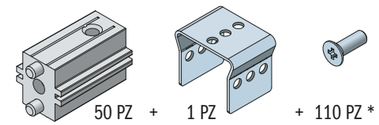

JUNCTION BLOCK WITH SCREWS
FOR SHELVING STRUCTURES
Junction Block (50) + Jig (1) + Screws (110)
UKIT.20X20.01 Darkened Screws for V12
UKIT.20x20.02 Zinc Plated Screws for 50S & S2I

BLOC DE JONCTION AVEC VIS POUR STRUCTURES ÉTAGÈRE
Bloc de Jonction (50) + Gabarit (1) + Vis (110)
UKIT.20X20.01 Vis Bruni pour V12
UKIT.20x20.02 Vis Zingué pour 50S & S2I

BLOQUES DE JUNCCIÓN CON TORNILLOS PARA ESTRUCTURAS MODULARES
Bloques de Junccion (50) + Plantilla (1) + Tornillos (110)
UKIT.20X20.01 Tornillos bruñido para V12 Negro Mate Barnizado
UKIT.20x20.02 Tornillos Galvanizado para 50S Anodizado Claro, S2I Anodizado Titanio

ITEM NUMBER	KIT PER BOX	BOX DIMENSION mm W x D x H	BOX DIMENSION inch W x D x H	BOX WEIGHT KG	BOX WEIGHT LB	STOCK IN AMERICA MSRP PRICING USD KIT	BOX
UKIT.20X20.01	1	150 x 100 x 90	5 7/8" x 3 7/8" x 3 1/2"	1.50	3.31	171.799	171.799
UKIT.20X20.02	1	150 x 100 x 90	5 7/8" x 3 7/8" x 3 1/2"	1.50	3.31	174.083	174.083

1756

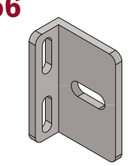

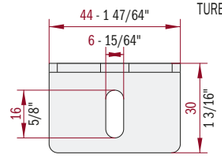

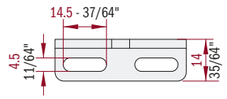

BRACKET FOR HANGING THE SHELF STRUCTURE ON THE WALL

SUPPORT POUR ACCROCHER LA STRUCTURE DE L'ÉTAGÈRE AU MUR

SOPORTE PARA COLGAR LA ESTRUCTURA DEL ESTANTE EN LA PARED

ITEM NUMBER	PCS PER BOX	BOX DIMENSION mm W x D x H	BOX DIMENSION inch W x D x H	BOX WEIGHT KG	BOX WEIGHT LB	STOCK IN AMERICA MSRP PRICING USD EACH	BOX
U1756.0001	50	160 x 215 x 130	6 1/4" x 8 1/2" x 5 1/8"	1.20	2.65	8.055	402.750

RCSA0010

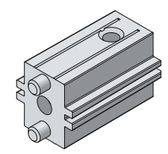

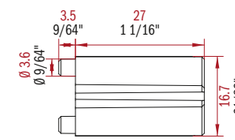

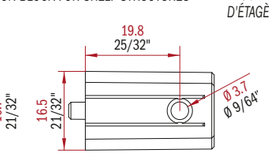

JUNCTION BLOCK FOR SHELF STRUCTURES

BLOC DE JONCTION POUR LES STRUCTURES D'ÉTAGÈRES

BLOQUE DE UNIÓN PARA ESTRUCTURAS DE ESTANTERÍA

ITEM NUMBER	PCS PER BOX	BOX DIMENSION mm W x D x H	BOX DIMENSION inch W x D x H	BOX WEIGHT KG	BOX WEIGHT LB	STOCK IN AMERICA MSRP PRICING USD EACH	BOX
URCSA0010	100	145 x 95 x 85	5 3/4" x 3 3/4" x 3 3/8"	2.50	5.51	2.189	218.900

VTR4X12TSPIC

FLAT HEAD TRILOBULAR THEAD FORMING SCREW M4X12.
Screw for 20x20 junction block URCSA0010

VIS AUTOFORMEUSES A TETE FRAISEE M4X12.
Vis pour bloc de jonction 20x20 URCSA0010

TORNILLO AVELLANDO AUTOCORTANTE M4X12.
Tornillo para bloque de conexiones 20x20 URCSA0010

ITEM NUMBER		PCS PER BOX	BOX DIMENSION mm W x D x H	BOX DIMENSION inch W x D x H	BOX WEIGHT KG	BOX WEIGHT LB	STOCK IN AMERICA MSRP PRICING USD EACH	BOX
VTR4X12TSPICZ	Zinc Plated Screws	1000	100 x 75 x 75	3 7/8" x 3" x 3"	1.00	2.20	0.168	168.000
VTR4X12TSPICB	Darkened Screws	1000	100 x 75 x 75	3 7/8" x 3" x 3"	1.00	2.20	0.168	168.000

ASW08

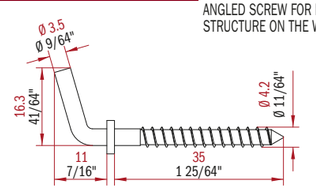

ANGLED SCREW FOR HANGING THE SHELF STRUCTURE ON THE WALL

VIS COUDÉE POUR ACCROCHER LA STRUCTURE DE L'ÉTAGÈRE AU MUR

TORNILLO EN ÁNGULO PARA COLGAR LA ESTRUCTURA DEL ESTANTE EN LA PARED

ITEM NUMBER	PCS PER BOX	BOX DIMENSION mm W x D x H	BOX DIMENSION inch W x D x H	BOX WEIGHT KG	BOX WEIGHT LB	STOCK IN AMERICA MSRP PRICING USD EACH	BOX
UFASW08x150ZP	100	145 x 95 x 85	5 3/4" x 3 3/4" x 3 3/8"	5.00	11.02	3.204	320.400

Project[1]

reddot winner 2021

Assembly Instructions

Aluminium Black Anodize *Aluminio Negro Anodizado* Aluminium Anodisé Noir

6615

ALUMINIUM UPRIGHT PROFILE FOR SHELVING STRUCTURES MODEL "S"
85S Aluminium Black Anodize

PROFILÉ VERTICAL EN ALUMINIUM POUR STRUCTURE DE RAYONNAGE MODÈLE "S"
85S Aluminium Anodisé Noir

PERFIL VERTICAL DE ALUMINIO PARA ESTRUCTURAS DE ESTANTERÍAS MODELO "S"
85S Aluminio Negro Anodizado

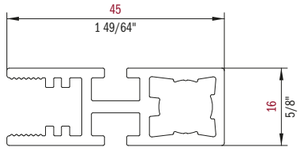

COLORS	ITEM NUMBER	LENGTH mm	LENGTH inch	PCS PER BOX	BOX DIMENSION mm W x D x H	BOX DIMENSION inch W x D x H	BOX WEIGHT KG	BOX WEIGHT LB	STOCK IN AMERICA MSRP PRICING USD METER	FOOT	EACH	BOX
85S	U661585SL45	4500	177 3/16"	8	4572 x 120 x 85	180" x 4 3/4" x 3 3/8"	29.66	65.39	41.251	12.573	185.630	1485.036

6616

ALUMINIUM CROSSBEAM PROFILE FOR SHELVING STRUCTURES MODEL "S"
85S Aluminium Black Anodize

PROFILÉ DE TRAVERSE EN ALUMINIUM POUR STRUCTURES DE RAYONNAGE MODÈLE "S"
85S Aluminium Anodisé Noir

PERFIL TRAVESAÑO DE ALUMINIO PARA ESTRUCTURAS DE ESTANTERÍAS MODELO "S"
85S Aluminio Negro Anodizado

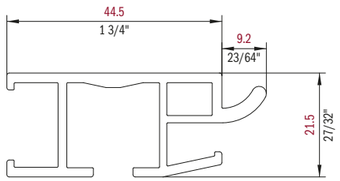

COLORS	ITEM NUMBER	LENGTH mm	LENGTH inch	PCS PER BOX	BOX DIMENSION mm W x D x H	BOX DIMENSION inch W x D x H	BOX WEIGHT KG	BOX WEIGHT LB	STOCK IN AMERICA MSRP PRICING USD METER	FOOT	EACH	BOX
85S	U661685SL45	4500	177 3/16"	5	4572 x 120 x 85	180" x 4 3/4" x 3 3/8"	18.87	41.60	44.563	13.583	200.534	1002.668

6617

ALUMINIUM SHELF PROFILE
85S Aluminium Black Anodize

PROFILÉ D'ÉTAGÈRE EN ALUMINIUM
85S Aluminium Anodisé Noir

PERFIL DE ESTANTERÍA DE ALUMINIO
85S Aluminio Negro Anodizado

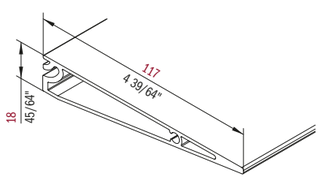

COLORS	ITEM NUMBER	LENGTH mm	LENGTH inch	PCS PER BOX	BOX DIMENSION mm W x D x H	BOX DIMENSION inch W x D x H	BOX WEIGHT KG	BOX WEIGHT LB	STOCK IN AMERICA MSRP PRICING USD METER	FOOT	EACH	BOX
85S	U661785SL45	4500	177 3/16"	3	4572 x 145 x 45	180" x 5 3/4" x 1 3/4"	19.18	42.28	79.210	24.143	356.445	1069.335

6621

ALUMINIUM SHELF PROFILE WITH LED STRIP HOUSING
85S Aluminium Black Anodize

PROFILÉ D'ÉTAGÈRE EN ALUMINIUM AVEC BOÎTIER DE BANDE LED
85S Aluminium Anodisé Noir

PERFIL DE ESTANTE DE ALUMINIO CON CARCASA DE TIRA DE LED
85S Aluminio Negro Anodizado

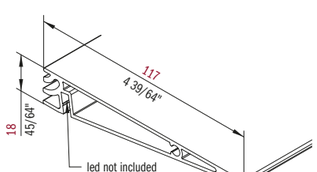

COLORS	ITEM NUMBER	LENGTH mm	LENGTH inch	PCS PER BOX	BOX DIMENSION mm W x D x H	BOX DIMENSION inch W x D x H	BOX WEIGHT KG	BOX WEIGHT LB	STOCK IN AMERICA MSRP PRICING USD METER	FOOT	EACH	BOX
85S	U662185SL45	4500	177 3/16"	3	4572 x 145 x 45	180" x 5 3/4" x 1 3/4"	19.90	43.87	96.956	29.552	436.302	1308.906

6618

ALUMINIUM CROSSBEAM PROFILE FOR SHELVING STRUCTURES MODEL "S"
85S Aluminium Black Anodize

PROFILÉ DE TRAVERSE EN ALUMINIUM POUR STRUCTURES DE RAYONNAGE MODÈLE "S"
85S Aluminium Anodisé Noir

PERFIL TRAVESAÑO DE ALUMINIO PARA ESTRUCTURAS DE ESTANTERÍAS MODELO "S"
85S Aluminio Negro Anodizado

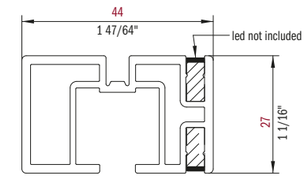

COLORS	ITEM NUMBER	LENGTH mm	LENGTH inch	PCS PER BOX	BOX DIMENSION mm W x D x H	BOX DIMENSION inch W x D x H	BOX WEIGHT KG	BOX WEIGHT LB	STOCK IN AMERICA MSRP PRICING USD METER	FOOT	EACH	BOX
85S	U661885SL45	4500	177 3/16"	6	4572 x 120 x 85	180" x 4 3/4" x 3 3/8"	26.87	59.24	50.770	15.475	228.465	1370.790

6619

ALUMINIUM UPRIGHT PROFILE FOR SHELVING STRUCTURES MODEL "L"
85S Aluminium Black Anodize

PROFILÉ MONTANT EN ALUMINIUM POUR STRUCTURE DE RAYONNAGE MODÈLE "L"
85S Aluminium Anodisé Noir

PERFIL VERTICAL DE ALUMINIO PARA ESTRUCTURAS DE ESTANTERÍAS MODELO "L"
85S Aluminio Negro Anodizado

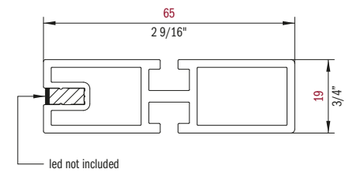

COLORS	ITEM NUMBER	LENGTH mm	LENGTH inch	PCS PER BOX	BOX DIMENSION mm W x D x H	BOX DIMENSION inch W x D x H	BOX WEIGHT KG	BOX WEIGHT LB	STOCK IN AMERICA MSRP PRICING USD METER	FOOT	EACH	BOX
85S	U661985SL3	3000	118 1/8"	5	3150 x 120 x 90	124" x 4 3/4" x 3 1/2"	18.10	39.90	52.537	16.013	157.611	788.055

6620

ALUMINIUM CROSSOBEAM PROFILE FOR SHELVING STRUCTURES MODEL "L"
85S Aluminium Black Anodize

PROFILÉ DE TRAVERSE EN ALUMINIUM POUR STRUCTURE DE RAYONNAGE MODÈLE "L"
85S Aluminium Anodisé Noir

PERFIL DE VIGA DE ALUMINIO PARA ESTRUCTURAS DE ESTANTERÍAS MODELO "L"
85S Aluminio Negro Anodizado

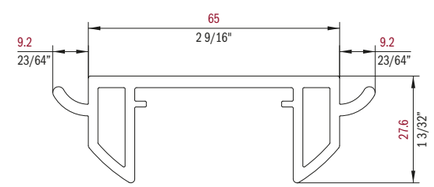

COLORS	ITEM NUMBER	LENGTH mm	LENGTH inch	PCS PER BOX	BOX DIMENSION mm W x D x H	BOX DIMENSION inch W x D x H	BOX WEIGHT KG	BOX WEIGHT LB	STOCK IN AMERICA MSRP PRICING USD METER	FOOT	EACH	BOX
85S	U662085SL45	4500	177 3/16"	3	4572 x 120 x 85	180" x 4 3/4" x 3 3/8"	19.95	43.98	67.553	20.590	303.989	911.966

6623

ALUMINIUM COAT STAND PROFILE FOR SHELVING STRUCTURE MODEL "L"
85S Aluminium Black Anodize
(❶) GASKET INCLUDED - NOT INSTALLED

PROFILÉ DE PORTEMANTEAU EN ALUMINIUM POUR STRUCTURE DE RAYONNAGE MODÈLE "L"
85S Aluminium Anodisé Noir
(❶) *JOINT INCLUS - NON INSTALLÉ*

PERFIL DE PERCHERO DE ALUMINIO PARA ESTRUCTURA DE ESTANTERÍA MODELO "L"
85S Aluminio Negro Anodizado
(❶) GUARNICION INCLUIDA - NO INSTALADA

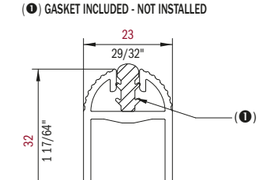

COLORS	ITEM NUMBER	LENGTH mm	LENGTH inch	PCS PER BOX	BOX DIMENSION mm W x D x H	BOX DIMENSION inch W x D x H	BOX WEIGHT KG	BOX WEIGHT LB	STOCK IN AMERICA MSRP PRICING USD METER	FOOT	EACH	BOX
85S	U662385SL45	4500	177 3/16"	5	4572 x 145 x 45	180" x 5 3/4" x 1 3/4"	14.50	31.97	39.477	12.033	177.647	888.233

6622

ALUMINIUM CROSSBEAM PROFILE FOR WALL FIXING FOR SHELVING STRUCTURES MODEL "L"
85S Aluminium Black Anodize

PROFILÉ DE TRAVERSE EN ALUMINIUM POUR FIXATION MURALE POUR STRUCTURES À RAYONNAGES MODÈLE "L"
85S Aluminium Anodisé Noir

PERFIL TRAVESAÑO DE ALUMINIO PARA FIJACIÓN A PARED PARA ESTRUCTURAS DE ESTANTERÍAS MODELO "L"
85S Aluminio Negro Anodizado

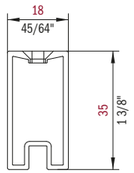

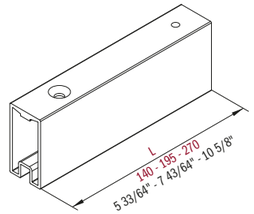

COLORS	ITEM NUMBER	LENGTH mm	LENGTH inch	PCS PER BOX	BOX DIMENSION mm W x D x H	BOX DIMENSION inch W x D x H	BOX WEIGHT KG	BOX WEIGHT LB	STOCK IN AMERICA MSRP PRICING USD EACH	STOCK IN AMERICA MSRP PRICING USD BOX
85S	U662285S.0001	140	5 1/2"	12	200 x 180 x 100	7 7/8" x 7 1/8" x 3 7/8"	1.316	2.90	33.798	405.576
85S	U662285S.0002	195	7 11/16"	12	200 x 180 x 100	7 7/8" x 7 1/8" x 3 7/8"	1.61	3.55	34.104	409.248
85S	U662285S.0003	270	10 5/8"	12	300 x 180 x 100	11 3/4" x 7 1/8" x 3 7/8"	2.06	4.54	36.869	442.428

Cut and drilled lengths

Different sizes on request

CF.6615/01

UPRIGHT FLOOR UPRIGHT ADJUSTMENT KIT FOR 6615.
06 = Color Match for 85S

KIT DE RÉGLAGE DE MONTANT DE PLANCHER POUR 6615.
06 = Couleur correspondante pour 85S

KIT DE AJUSTE VERTICAL DE SUELO PARA 6615.
06 = Ajuste de color 85S

ITEM NUMBER		KIT PER BOX	BOX DIMENSION mm W x D x H	BOX DIMENSION inch W x D x H	BOX WEIGHT KG	BOX WEIGHT LB	STOCK IN AMERICA MSRP PRICING USD KIT	STOCK IN AMERICA MSRP PRICING USD BOX
	UCF.6615-0601	20	220 x 190 x 160	8 5/8" x 7 1/2" x 6 1/4"	0.90	1.98	20.100	402.000

CF.6615/02

PLASTIC SHELF CAPS (RH/LH) FOR 6615.
06 = Color Match for 85S

BOÎTES EN PLASTIQUE POUR COUVERCLES D'ÉTAGÈRES (DROITE/GAUCHE) POUR 6615.
06 = Couleur correspondante pour 85S

TAPAS DE PLÁSTICO PARA REPISAS (DCHA. / IZQ.) PARA 6615.
06 = Ajuste de color 85S

ITEM NUMBER		KIT PER BOX	BOX DIMENSION mm W x D x H	BOX DIMENSION inch W x D x H	BOX WEIGHT KG	BOX WEIGHT LB	STOCK IN AMERICA MSRP PRICING USD KIT	STOCK IN AMERICA MSRP PRICING USD BOX
06	UCF.6615-0602	40	220 x 190 x 160	8 5/8" x 7 1/2" x 6 1/4"	1.70	3.75	7.535	301.400

CF.6615/03

WALL FASTENING KIT FOR 6615

KIT DE FIXATION MURALE POUR 6615

KIT DE FIJACIÓN A LA PARED PARA 6615

ITEM NUMBER		KIT PER BOX	BOX DIMENSION mm W x D x H	BOX DIMENSION inch W x D x H	BOX WEIGHT KG	BOX WEIGHT LB	STOCK IN AMERICA MSRP PRICING USD KIT	STOCK IN AMERICA MSRP PRICING USD BOX
	UCF.6615-0603	40	220 x 190 x 160	8 5/8" x 7 1/2" x 6 1/4"	0.94	2.07	8.012	320.480

CF.6616/01

CROSSBEAM FASTENING KIT 6616 / 6618 / 6623.

KIT DE FIXATION TRAVERSE 6616 / 6618 / 6623

KIT FIJACIÓN TRAVESAÑO 6616/6618/6623.

ITEM NUMBER		KIT PER BOX	BOX DIMENSION mm W x D x H	BOX DIMENSION inch W x D x H	BOX WEIGHT KG	BOX WEIGHT LB	STOCK IN AMERICA MSRP PRICING USD KIT	STOCK IN AMERICA MSRP PRICING USD BOX
	UCF.6616-0601	20	220 x 190 x 160	8 5/8" x 7 1/2" x 6 1/4"	2.18	4.81	29.087	581.740

CF.6617

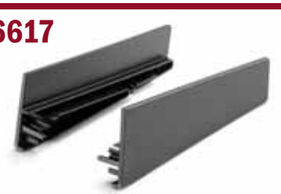

PLASTIC SHELF CAP (RH/LH).
06 = Color Match for 85S

BOÎTES EN PLASTIQUE POUR COUVERCLES D'ÉTAGÈRES (DROITE/GAUCHE).
06 = Couleur correspondante pour 85S

TAPAS DE PLÁSTICO PARA REPISAS (DCHA. / IZQ.).
06 = Ajuste de color 85S

ITEM NUMBER		KIT PER BOX	BOX DIMENSION mm W x D x H	BOX DIMENSION inch W x D x H	BOX WEIGHT KG	BOX WEIGHT LB	STOCK IN AMERICA MSRP PRICING USD KIT	STOCK IN AMERICA MSRP PRICING USD BOX
06	UCF.6617-06	10	220 x 190 x 160	8 5/8" x 7 1/2" x 6 1/4"	0.66	1.46	9.633	96.330

CF.6619/01

CEILING / FLOOR ADJUSTMENT KIT FOR 6619

KIT DE RÉGLAGE PLAFOND / SOL POUR 6619

KIT DE AJUSTE DE TECHO / SUELO PARA 6619

ITEM NUMBER	KIT PER BOX	BOX DIMENSION mm W x D x H	BOX DIMENSION inch W x D x H	BOX WEIGHT KG	BOX WEIGHT LB	STOCK IN AMERICA MSRP PRICING USD KIT	STOCK IN AMERICA MSRP PRICING USD BOX
UCF.6619-0601	10	220 x 190 x 160	8 5/8" x 7 1/2" x 6 1/4"	1.53	3.37	86.424	864.240

CF.6619/02

FLOOR ADJUSTMENT KIT FOR 6619

KIT DE RÉGLAGE AU SOL POUR 6619

KIT DE AJUSTE DE SUELO PARA 6619

ITEM NUMBER	KIT PER BOX	BOX DIMENSION mm W x D x H	BOX DIMENSION inch W x D x H	BOX WEIGHT KG	BOX WEIGHT LB	STOCK IN AMERICA MSRP PRICING USD KIT	STOCK IN AMERICA MSRP PRICING USD BOX
UCF.6619-0602	10	220 x 190 x 160	8 5/8" x 7 1/2" x 6 1/4"	1.01	2.23	29.382	293.820

CF.6619/03

GLASS SHELF FASTENING KIT (THICKNESS MIN. 6 MM - MAX 8 MM) FOR SHELVING STRUCTURES MODEL "L"

KIT DE FIXATION D'ÉTAGÈRES EN VERRE (ÉPAISSEUR MIN. 6 MM - MAX 8 MM) POUR STRUCTURES D'ÉTAGÈRES MODÈLE "L"

KIT DE FIJACIÓN PARA ESTANTES DE VIDRIO (ESPESOR MÍN. 6 MM - MÁX. 8 MM) PARA ESTRUCTURAS DE ESTANTERÍAS MODELO "L"

ITEM NUMBER	KIT PER BOX	BOX DIMENSION mm W x D x H	BOX DIMENSION inch W x D x H	BOX WEIGHT KG	BOX WEIGHT LB	STOCK IN AMERICA MSRP PRICING USD KIT	STOCK IN AMERICA MSRP PRICING USD BOX
UCF.6619-0603	10	220 x 190 x 160	8 5/8" x 7 1/2" x 6 1/4"	1.37	3.02	31.238	312.380

CF.6619/04

WOODEN SHELF FASTENING KIT (THICKNESS MIN. 16 MM - MAX 40 MM) FOR SHELVING STRUCTURES MODEL "L"

KIT DE FIXATION D'ÉTAGÈRES EN BOIS (ÉPAISSEUR MIN. 16 MM - MAX 40 MM) POUR STRUCTURES D'ÉTAGÈRES MODÈLE "L"

KIT DE FIJACIÓN PARA ESTANTES DE MADERA (ESPESOR MÍN. 16 MM - MÁX. 40 MM) PARA ESTRUCTURAS DE ESTANTERÍAS MODELO "L"

ITEM NUMBER	KIT PER BOX	BOX DIMENSION mm W x D x H	BOX DIMENSION inch W x D x H	BOX WEIGHT KG	BOX WEIGHT LB	STOCK IN AMERICA MSRP PRICING USD KIT	STOCK IN AMERICA MSRP PRICING USD BOX
UCF.6619-0604	10	220 x 190 x 160	8 5/8" x 7 1/2" x 6 1/4"	1.52	3.35	75.787	757.870

CF.6619/6407

WOODEN SHELF (THICKNESS MIN. 16 MM - MAX 40 MM) AND WOODEN CABINET FASTENING KIT FOR SHELVING STRUCTURES MODEL "L"

KIT DE FIXATION POUR ÉTAGÈRE EN BOIS (ÉPAISSEUR MIN. 16 MM - MAX 40 MM) ET ARMOIRE EN BOIS POUR STRUCTURES D'ÉTAGÈRES MODÈLE "L"

KIT DE FIJACIÓN PARA ESTANTE DE MADERA (ESPESOR MÍN. 16 MM - MAX 40 MM) Y ARMARIO DE MADERA PARA ESTRUCTURAS DE ESTANTERIAS MODELO "L"

NEW!! **NEW DESIGN WILL REPLACE CURRENT DESIGN WHEN CURRENT DESIGN INVENTORY IS OVER**

ITEM NUMBER	KIT PER BOX	BOX DIMENSION mm W x D x H	BOX DIMENSION inch W x D x H	BOX WEIGHT KG	BOX WEIGHT LB	STOCK IN AMERICA MSRP PRICING USD KIT	STOCK IN AMERICA MSRP PRICING USD BOX
UCF.6619-6407	10	220 x 190 x 160	8 5/8" x 7 1/2" x 6 1/4"	0.725	1.60	64.002	640.020

CF.6619/05

WOODEN CABINET FASTENING KIT FOR SHELVING STRUCTURES MODEL "L"

KIT DE FIXATION D'ARMOIRE EN BOIS POUR STRUCTURE DE RAYONNAGE MODÈLE "L"

KIT DE FIJACIÓN DE ARMARIO DE MADERA PARA ESTRUCTURAS DE ESTANTERÍAS MODELO "L"

ITEM NUMBER	KIT PER BOX	BOX DIMENSION mm W x D x H	BOX DIMENSION inch W x D x H	BOX WEIGHT KG	BOX WEIGHT LB	STOCK IN AMERICA MSRP PRICING USD KIT	STOCK IN AMERICA MSRP PRICING USD BOX
UCF.6619-0605	10	373 x 200 x 105	14 5/8" x 7 7/8" x 4 1/8"	7.75	17.09	110.696	1106.960

CF.6620/01

CROSSBEAM FASTENING KIT FOR 6620 | *KIT DE FIXATION TRAVERSE POUR 6620* | KIT DE FIJACIÓN DE TRAVESAÑOS PARA 6620

ITEM NUMBER	KIT PER BOX	BOX DIMENSION mm	BOX DIMENSION inch	BOX WEIGHT		STOCK IN AMERICA MSRP PRICING USD	
		W x D x H	W x D x H	KG	LB	KIT	BOX
UCF.6620-0601	20	220 x 190 x 160	8 5/8" x 7 1/2" x 6 1/4"	2.42	5.34	45.125	902.500

CF.6622/01

WALL FASTENING KIT FOR 6622 | *KIT DE FIXATION MURALE POUR 6622* | KIT DE FIJACIÓN A LA PARED PARA 6622

ITEM NUMBER	KIT PER BOX	BOX DIMENSION mm	BOX DIMENSION inch	BOX WEIGHT		STOCK IN AMERICA MSRP PRICING USD	
		W x D x H	W x D x H	KG	LB	KIT	BOX
UCF.6622/01	12	220 x 190 x 160	8 5/8" x 7 1/2" x 6 1/4"	1.22	2.69	11.408	136.896

PROJECT2 30X30

30X30 STRUCTURE ASSEMBLY

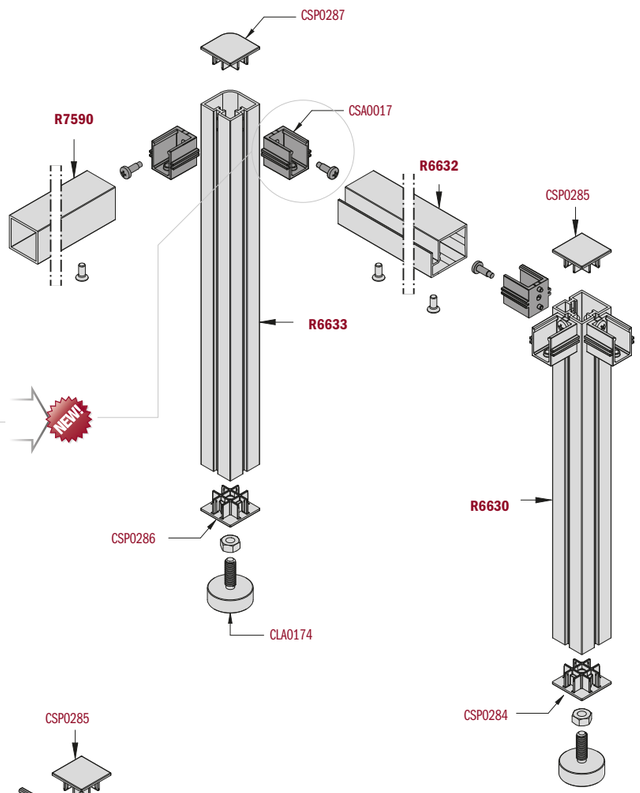

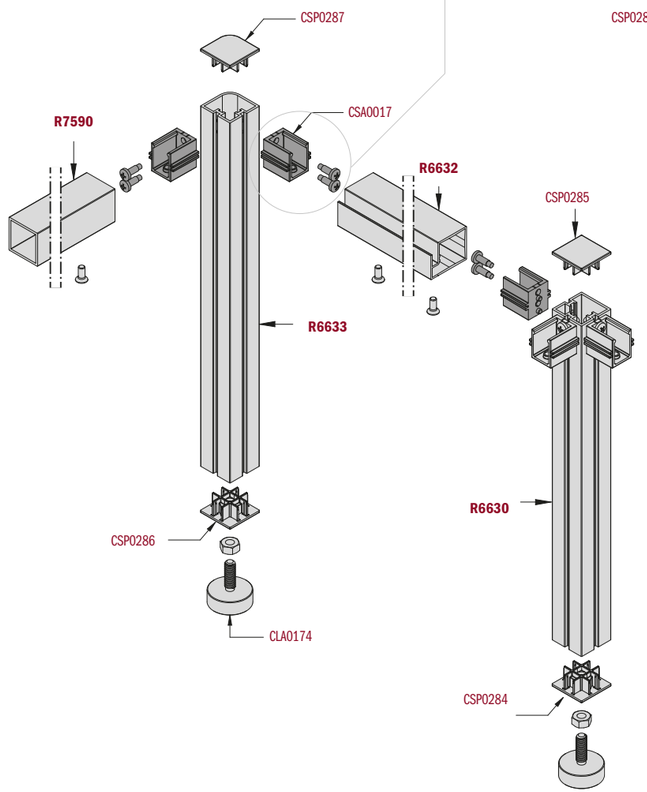

R6630
Upright 31x31

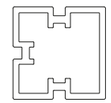

R6633
Upright 31x31

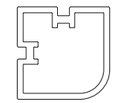

R7590
Crossbeam 30x30

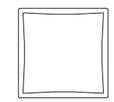

R6632
Crossbeam for thick glass 4-6 mm and for wood 19 mm

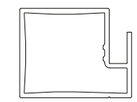

CSA0017
Joint for art. R6630 - R6632 - R6633 - R7590

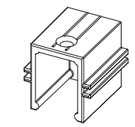

CSP0285
Upper Cover for art. 6630

CSP0287
Upper Cover for art. 6633

CEP0038-01
Gasket for 4 mm glass

CSP0284
Leg cover for art. 6630

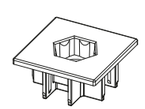

CSP0286
Leg cover for art. 6633

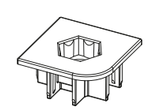

CEP0039-01
Gasket for 6 mm glass

CLA0174
Aluminium adjusters for structures

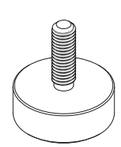

CLA0174
Aluminium adjusters for structures

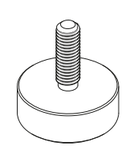

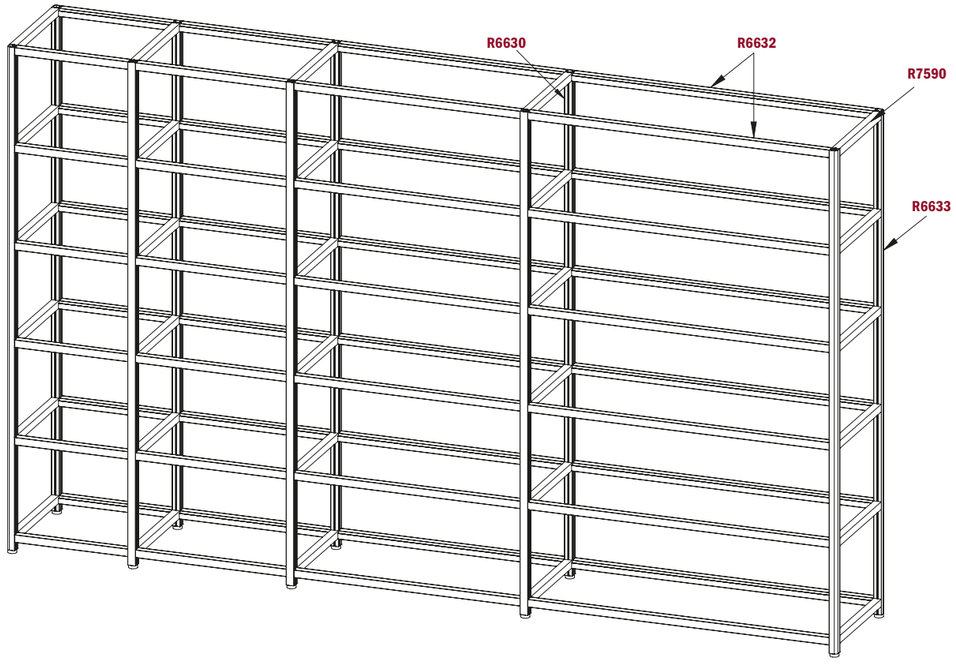

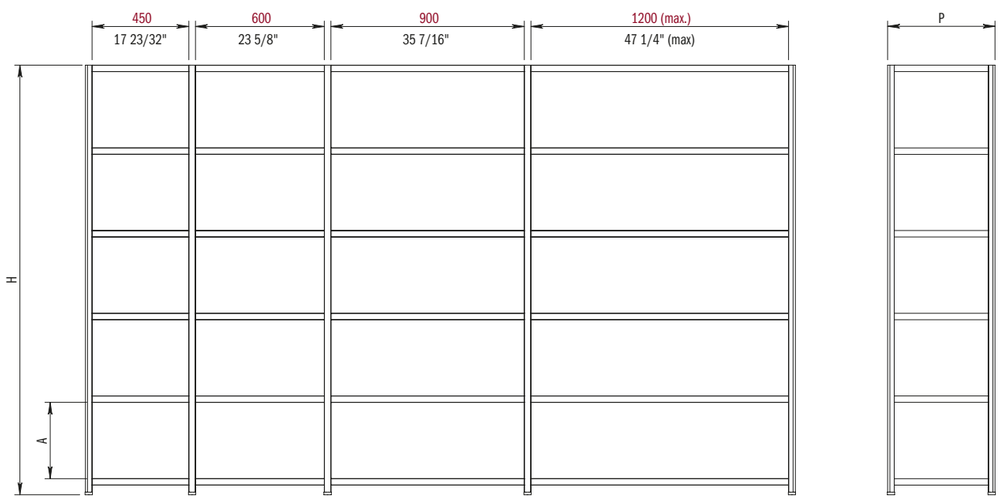

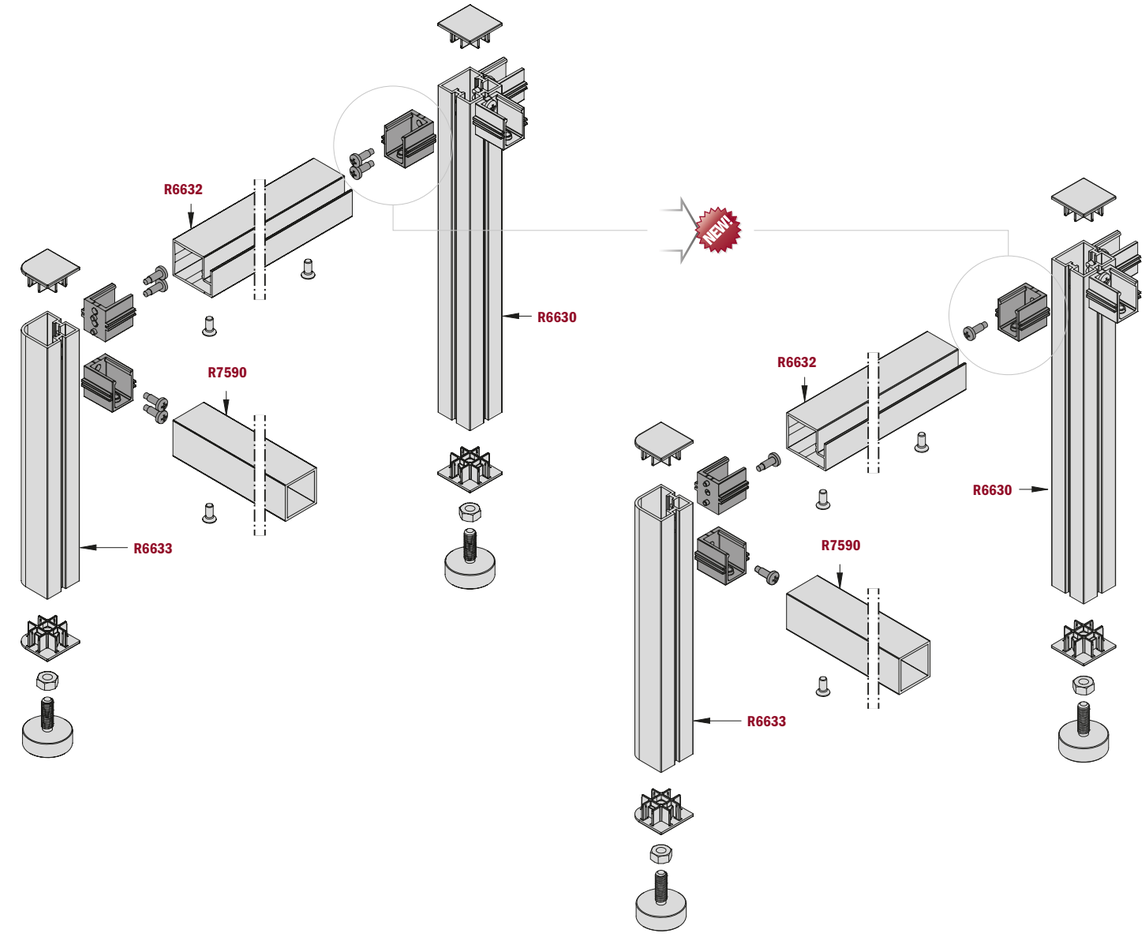

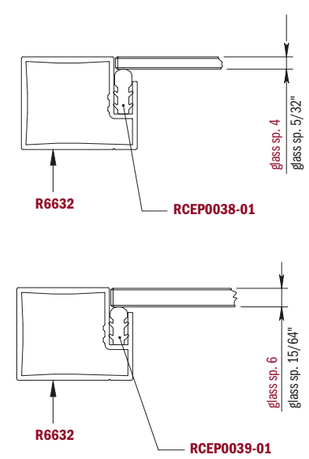

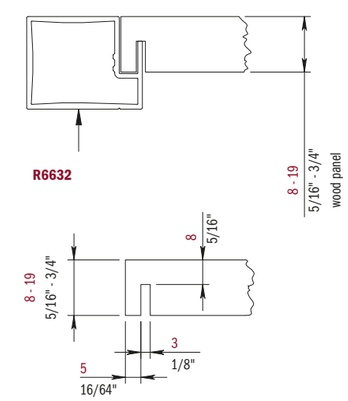

Machining for wood shelf

6630

ALUMINIUM INTERMEDIATE UPRIGHT PROFILE
V13 Black Textured Powder Coated

PROFILÉ MONTANT INTERMÉDIAIRE EN ALUMINIUM
V13 Aluminium Noire Texturé Vernie

PERFIL MONTANTE INTERMEDIO DE ALUMINIO
V13 Aluminio Negro Texturizado

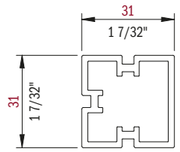

COLORS	ITEM NUMBER	LENGTH mm	LENGTH inch	PCS PER BOX	BOX DIMENSION mm W x D x H	BOX DIMENSION inch W x D x H	BOX WEIGHT KG	BOX WEIGHT LB	STOCK IN AMERICA MSRP PRICING USD METER	FOOT	EACH	BOX
V13	UR6630V13L45	4500	177 3/16"	6	4550 x 120 x 85	179 1/8" x 4 3/4" x 3 3/8"	22.65	49.93	31.722	9.669	142.749	856.494

6633

ALUMINIUM SIDE UPRIGHT PROFILE
V13 Black Textured Powder Coated

PROFILÉ MONTANT LATERAL EN ALUMINIUM
V13 Aluminium Noire Texturé Vernie

PERFIL MONTANTE LATERAL DE ALUMINIO
V13 Aluminio Negro Texturizado

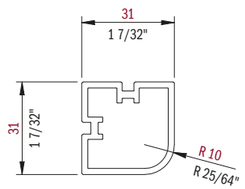

COLORS	ITEM NUMBER	LENGTH mm	LENGTH inch	PCS PER BOX	BOX DIMENSION mm W x D x H	BOX DIMENSION inch W x D x H	BOX WEIGHT KG	BOX WEIGHT LB	STOCK IN AMERICA MSRP PRICING USD METER	FOOT	EACH	BOX
V13	UR6633V13L45	4500	177 3/16"	6	4550 x 120 x 85	179 1/8" x 4 3/4" x 3 3/8"	22.65	49.93	33.976	10.356	152.892	917.352

7590

ALUMINIUM LATERAL PROFILE
V13 Black Textured Powder Coated

PROFILÉ LATERAL EN ALUMINIUM
V13 Aluminium Noire Texturé Vernie

PERFIL LATERAL DE ALUMINIO
V13 Aluminio Negro Texturizado

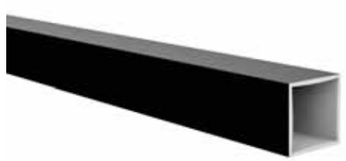

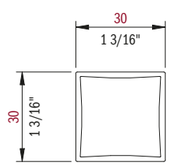

COLORS	ITEM NUMBER	LENGTH mm	LENGTH inch	PCS PER BOX	BOX DIMENSION mm W x D x H	BOX DIMENSION inch W x D x H	BOX WEIGHT KG	BOX WEIGHT LB	STOCK IN AMERICA MSRP PRICING USD METER	FOOT	EACH	BOX
V13	UR7590V13L45	4500	177 3/16"	6	4550 x 120 x 85	179 1/8" x 4 3/4" x 3 3/8"	5.74	12.65	28.626	8.725	128.817	772.902

6632

ALUMINIUM FRONT & REAR PROFILE FOR SHELVING
For Glass Shelves 4mm and 6mm and Wood Shelves up to 19mm
V13 Black Textured Powder Coated

PROFILÉ AVANT & ARRIÈRE EN ALUMINIUM POUR STRUCTURES ÉTAGÈRE
Pour le étagères en verre 4 et 6mm et en bois jusqu'à 19mm
V13 Aluminium Noire Texturé Vernie

PERFIL DE TRAVÉS DE ALUMINIO PARA ESTANTES
Para estantes de vidrio 4mm y 6mm y madera hasta 19mm
V13 Aluminio Negro Texturizado

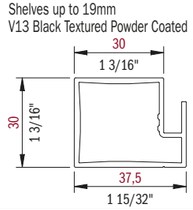

COLORS	ITEM NUMBER	LENGTH mm	LENGTH inch	PCS PER BOX	BOX DIMENSION mm W x D x H	BOX DIMENSION inch W x D x H	BOX WEIGHT KG	BOX WEIGHT LB	STOCK IN AMERICA MSRP PRICING USD METER	FOOT	EACH	BOX
V13	UR6632V13L45	4500	177 3/16"	6	4550 x 120 x 85	179 1/8" x 4 3/4" x 3 3/8"	18.13	39.97	30.580	9.321	137.610	825.660

CEP

GASKET FOR GLASS SHELVES
* For 4mm - 5/32" glass
** For 6mm - 1/4" glass

JOINT D'ÉTANCHÈITÉ POUR ÉTAGÈRE EN VERRE
** Pour verre de 4mm - 5/32"*
*** Pour verre de 6mm - 1/4"*

JUNTA PARA ESTANTES DE VIDRIO
* Para de vidrio 4mm - 5/32"
** Para de vidrio 6mm - 1/4"

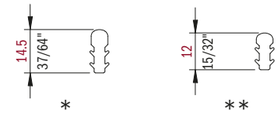

	ITEM NUMBER	LENGTH mm	LENGTH inch	PCS PER BOX	BOX DIMENSION mm W x D x H	BOX DIMENSION inch W x D x H	BOX WEIGHT KG	BOX WEIGHT LB	STOCK IN AMERICA MSRP PRICING USD METER	FOOT	EACH	BOX
*	URCEP0038-01	40000	1574 13/16"	1	460 x 170 x 120	18 1/8" x 6 3/4" x 4 3/4"	4.00	8.82	5.362	1.634	214.480	214.480
**	URCEP0039-01	40000	1574 13/16"	1	460 x 170 x 120	18 1/8" x 6 3/4" x 4 3/4"	3.30	7.28	5.362	1.634	214.480	214.480

CF.6630-XX/01

COMPLETE KIT OF CAP BOLT AND ADJUSTER FOR 6630

KIT COMPLET DE BOULON CAPUCHON ET AJUSTEUR POUR 6630

KIT COMPLETO DE TORNILLO TAPA Y REGULADOR PARA 6630

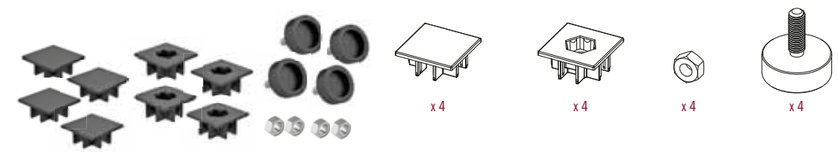

ITEM NUMBER	KIT PER BOX	BOX DIMENSION mm W x D x H	BOX DIMENSION inch W x D x H	BOX WEIGHT KG	BOX WEIGHT LB	STOCK IN AMERICA MSRP PRICING USD KIT	BOX
UCF.6630-06/01	10	220 x 190 x 160	8 5/8" x 7 1/2" x 6 1/4"	2.36	5.20	109.212	1092.120

CF.6633-XX/01

COMPLETE KIT OF CAP BOLT AND ADJUSTER FOR 6633

KIT COMPLET DE BOULON CAPUCHON ET AJUSTEUR POUR 6633

KIT COMPLETO DE TORNILLO TAPA Y REGULADOR PARA 6633

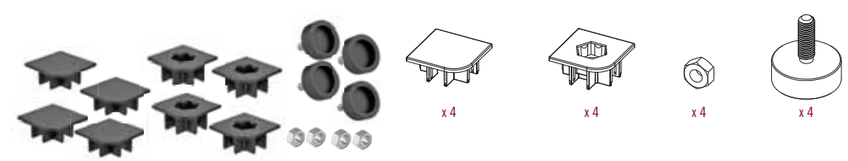

ITEM NUMBER	KIT PER BOX	BOX DIMENSION mm W x D x H	BOX DIMENSION inch W x D x H	BOX WEIGHT KG	BOX WEIGHT LB	STOCK IN AMERICA MSRP PRICING USD KIT	BOX
UCF.6633-06/01	10	220 x 190 x 160	8 5/8" x 7 1/2" x 6 1/4"	2.36	5.20	109.202	1092.020

CF.CSA0017-01

COMPLETE KIT OF JOINING BLOCK AND SCREW FOR 6630 - 6632 - 6633 - 7590

KIT COMPLET DE BLOC D'ASSEMBLAGE ET VIS POUR 6630 - 6632 - 6633 - 7590

KIT COMPLETO DE BLOQUE DE UNIÓN Y TORNILLO PARA 6630 - 6632 - 6633 - 7590

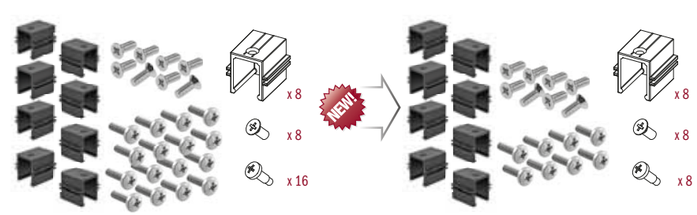

ITEM NUMBER	KIT PER BOX	BOX DIMENSION mm W x D x H	BOX DIMENSION inch W x D x H	BOX WEIGHT KG	BOX WEIGHT LB	STOCK IN AMERICA MSRP PRICING USD KIT	BOX
UCF.CSA0017-01	10	220 x 190 x 160	8 5/8" x 7 1/2" x 6 1/4"	4.60	10.14	40.453	404.530

PROJECT2 30X30

DRILLING SPECIFICATIONS

R6630 / R6633

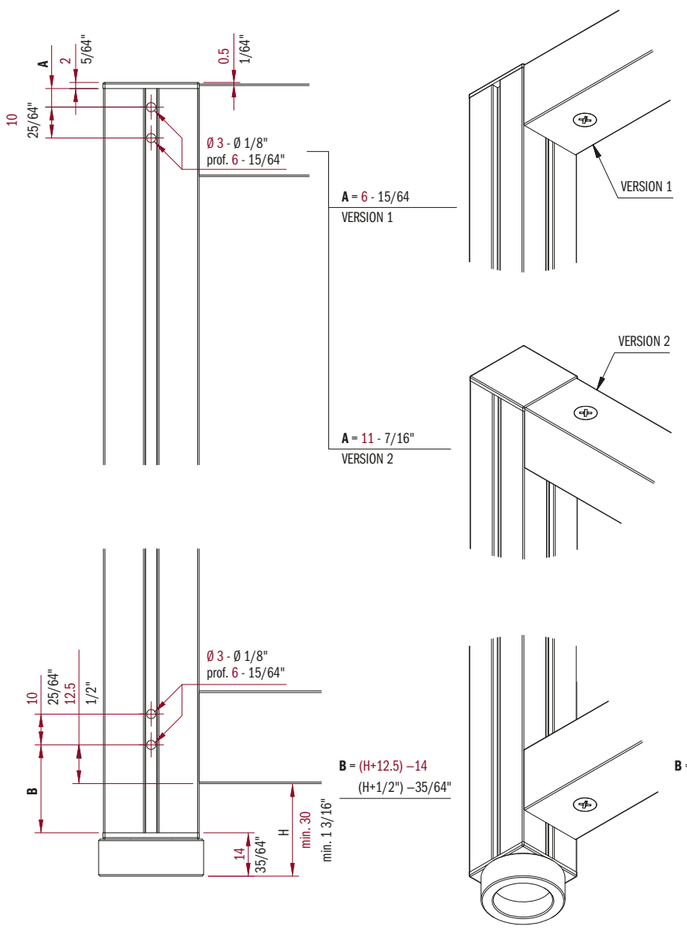

New joining block CF.CSA0017-01

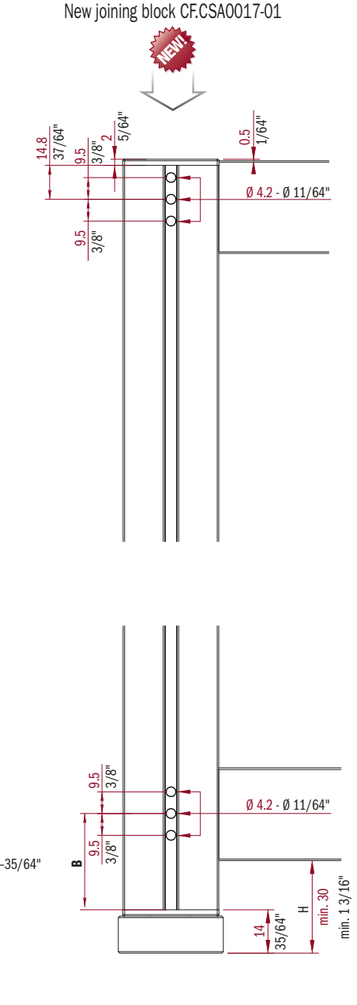

PROJECT2 30X30 PROJECT2 30X30 PROJECT2 30X30

R7590

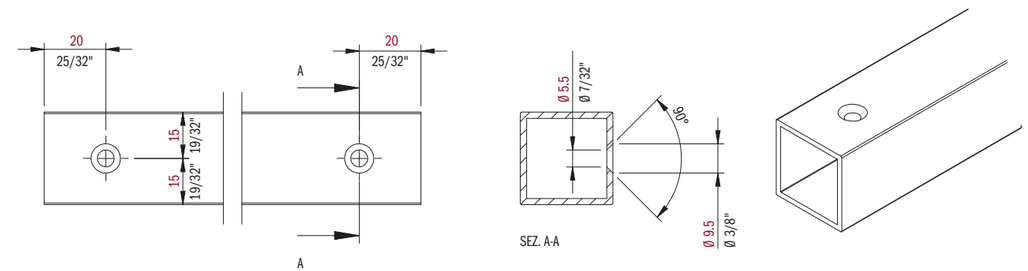

R6632

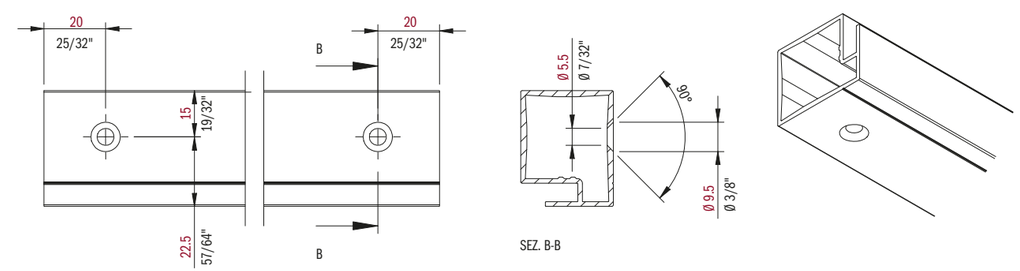

CF.6630-xx/01

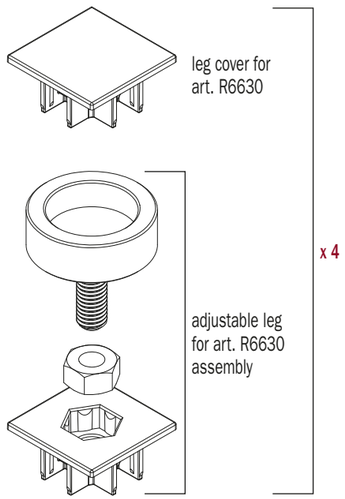

CF.6633-xx/01

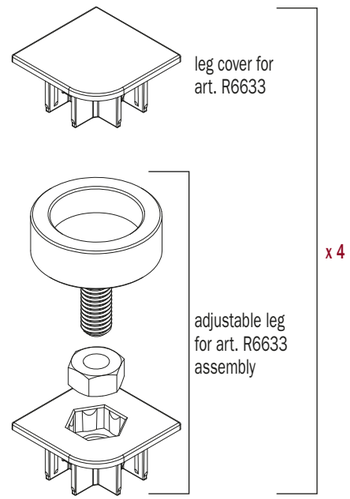

CF.CSA0017/01

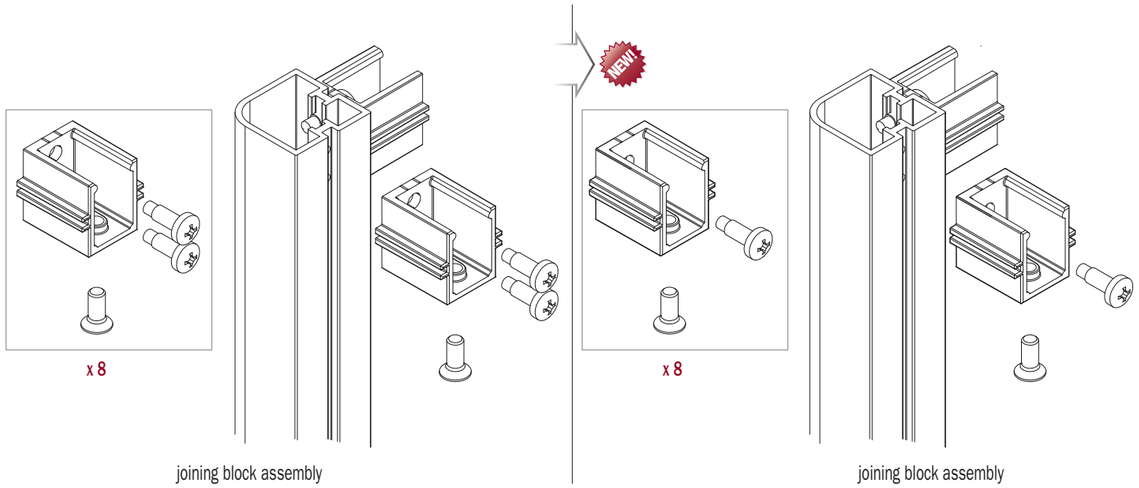

ATTENTION:
In the figure you can see the joining block assembly for VERSION 1 (screw in the underside).
If you want the VERSION 2 (screw in the upperside) you have to rotate the joining block 180°.

ALUMINIUM STRUCTURES FOR BASE CABINETS

Project²

Watch the video

PROJECT2 55X31

55X31 STRUCTURE ASSEMBLY

SOLUTION A

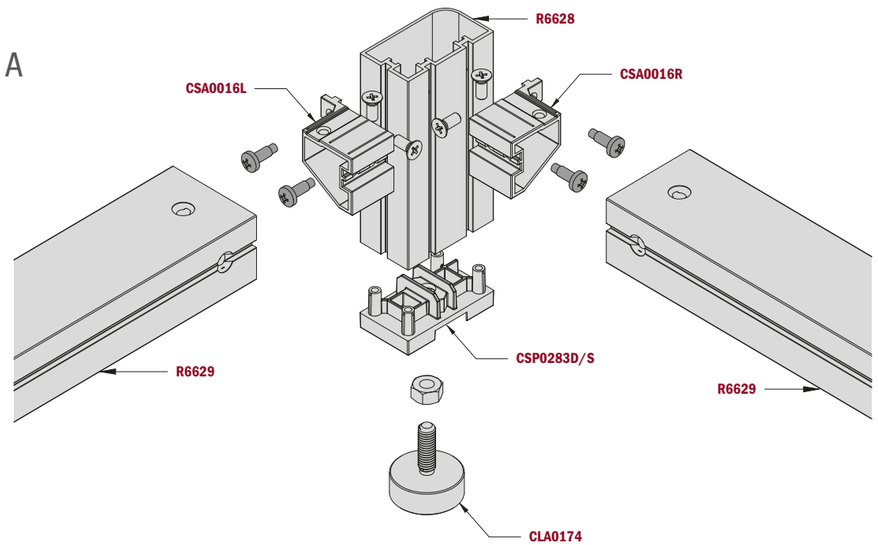

SOLUTION B

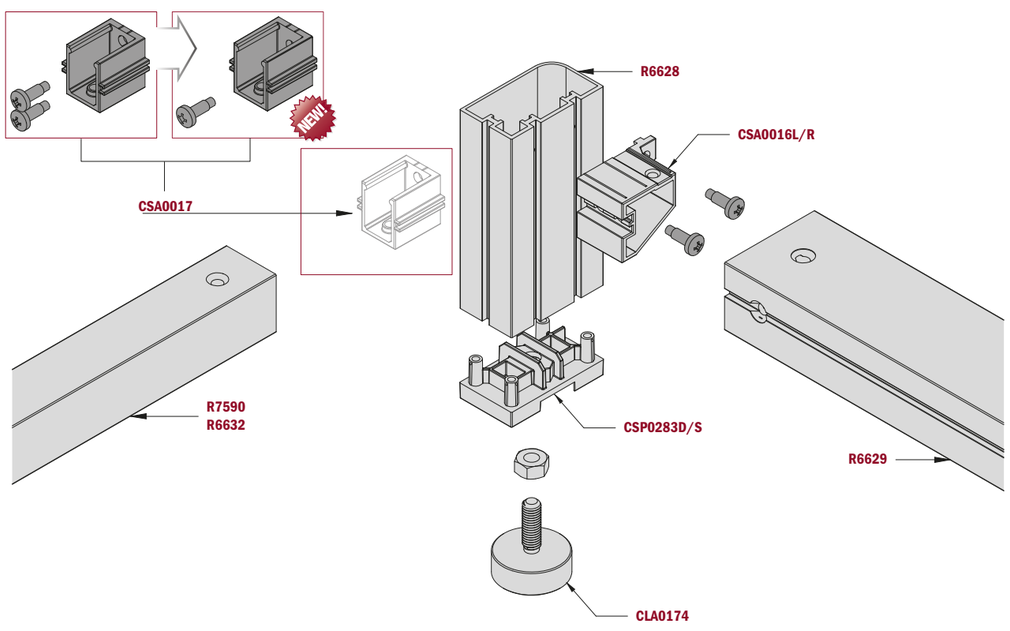

R6628
Upright 55x31

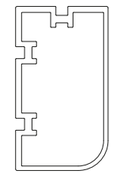

R6629
Crossbeam

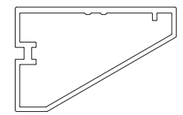

R6630
Reinforcing upright 31x31

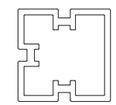

R7590
Crossbeam 30x30

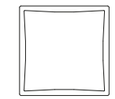

R6632
Crossbeam 30x30

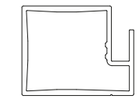

CSP0283D
Leg cover

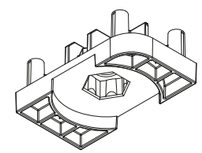

CSA0016R
Joint for 55x31

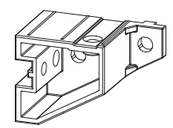

CSP0284
Leg cover

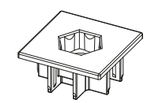

CSA0017
Joint for 30x30
art. R6630, R6632 and R7590

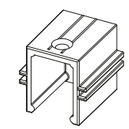

CSP0283S
Leg cover

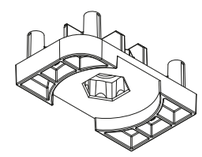

CSA0016L
Joint for 55x31

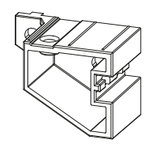

CLA0174
Aluminium adjuster for structure

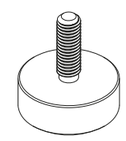

CLA0174
Aluminium adjuster for structure

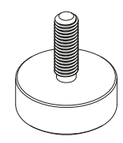

6628

ALUMINIUM UPRIGHT PROFILE 51x31
V13 Black Textured Powder Coated

PROFILÉ MONTANT 51x31 EN ALUMINIUM
V13 Aluminium Noire Texturé Vernie

PERFIL MONTANTE 51x31 DE ALUMINIO
V13 Aluminio Negro Texturizado

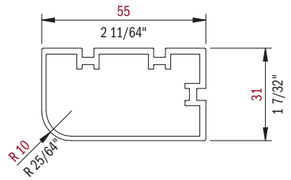

COLORS	ITEM NUMBER	LENGTH mm	LENGTH inch	PCS PER BOX	BOX DIMENSION mm W x D x H	BOX DIMENSION inch W x D x H	BOX WEIGHT KG	BOX WEIGHT LB	STOCK IN AMERICA MSRP PRICING USD METER	FOOT	EACH	BOX
V13	UR6628V13L45	4500	177 3/16"	5	4550 x 120 x 85	179 1/8" x 4 3/4" x 3 3/8"	22.22	48.99	37.313	11.373	167.909	839.543

6629

ALUMINIUM LATERAL PROFILE
V13 Black Textured Powder Coated

PROFILÉ LATERAL EN ALUMINIUM
V13 Aluminium Noire Texturé Vernie

PERFIL LATERAL DE ALUMINIO
V13 Aluminio Negro Texturizado

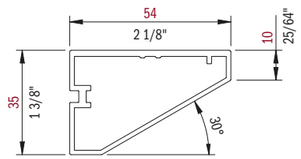

COLORS	ITEM NUMBER	LENGTH mm	LENGTH inch	PCS PER BOX	BOX DIMENSION mm W x D x H	BOX DIMENSION inch W x D x H	BOX WEIGHT KG	BOX WEIGHT LB	STOCK IN AMERICA MSRP PRICING USD METER	FOOT	EACH	BOX
V13	UR6629V13L45	4500	177 3/16"	6	4550 x 120 x 85	179 1/8" x 4 3/4" x 3 3/8"	22.27	49.10	32.836	10.008	147.762	886.572

6630

ALUMINIUM INTERMEDIATE UPRIGHT PROFILE
V13 Black Textured Powder Coated

PROFILÉ MONTANT INTERMÉDIAIRE EN ALUMINIUM
V13 Aluminium Noire Texturé Vernie

PERFIL MONTANTE INTERMEDIO DE ALUMINIO
V13 Aluminio Negro Texturizado

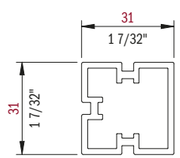

COLORS	ITEM NUMBER	LENGTH mm	LENGTH inch	PCS PER BOX	BOX DIMENSION mm W x D x H	BOX DIMENSION inch W x D x H	BOX WEIGHT KG	BOX WEIGHT LB	STOCK IN AMERICA MSRP PRICING USD METER	FOOT	EACH	BOX
V13	UR6630V13L45	4500	177 3/16"	6	4550 x 120 x 85	179 1/8" x 4 3/4" x 3 3/8"	22.65	49.93	31.722	9.669	142.749	856.494

7590

ALUMINIUM LATERAL PROFILE
V13 Black Textured Powder Coated

PROFILÉ LATERAL EN ALUMINIUM
V13 Aluminium Noire Texturé Vernie

PERFIL LATERAL DE ALUMINIO
V13 Aluminio Negro Texturizado

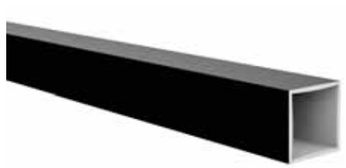

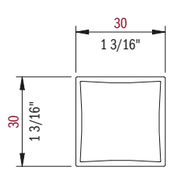

COLORS	ITEM NUMBER	LENGTH mm	LENGTH inch	PCS PER BOX	BOX DIMENSION mm W x D x H	BOX DIMENSION inch W x D x H	BOX WEIGHT KG	BOX WEIGHT LB	STOCK IN AMERICA MSRP PRICING USD METER	FOOT	EACH	BOX
V13	UR7590V13L45	4500	177 3/16"	6	4550 x 120 x 85	179 1/8" x 4 3/4" x 3 3/8"	5.74	12.65	28.626	8.725	128.817	772.902

6632

ALUMINIUM FRONT & REAR PROFILE FOR SHELVING
For Glass Shelves 4mm and 6mm and Wood Shelves up to 19mm
V13 Black Textured Powder Coated

PROFILÉ AVANT & ARRIÈRE EN ALUMINIUM POUR STRUCTURES ÉTAGÈRE
Pour le étagères en verre 4 et 6mm et en bois jusqu'à 19mm
V13 Aluminium Noire Texturé Vernie

PERFIL DE TRAVÉS DE ALUMINIO PARA ESTANTES
Para estantes de vidrio 4mm y 6mm y madera hasta 19mm
V13 Aluminio Negro Texturizado

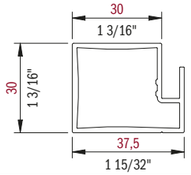

COLORS	ITEM NUMBER	LENGTH mm	LENGTH inch	PCS PER BOX	BOX DIMENSION mm W x D x H	BOX DIMENSION inch W x D x H	BOX WEIGHT KG	BOX WEIGHT LB	STOCK IN AMERICA MSRP PRICING USD METER	FOOT	EACH	BOX
V13	UR6632V13L45	4500	177 3/16"	6	4550 x 120 x 85	179 1/8" x 4 3/4" x 3 3/8"	18.13	39.97	30.580	9.321	137.610	825.660

CEP

GASKET FOR GLASS SHELVES
* For 4mm - 5/32" glass
** For 6mm - 1/4" glass

JOINT D'ÉTANCHÈITÉ POUR ÉTAGÈRE EN VERRE
** Pour verre de 4mm - 5/32"*
*** Pour verre de 6mm - 1/4"*

JUNTA PARA ESTANTES DE VIDRIO
* Para de vidrio 4mm - 5/32"
** Para de vidrio 6mm - 1/4"

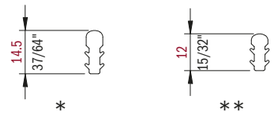

COLORS	ITEM NUMBER	LENGTH mm	LENGTH inch	PCS PER BOX	BOX DIMENSION mm W x D x H	BOX DIMENSION inch W x D x H	BOX WEIGHT KG	BOX WEIGHT LB	STOCK IN AMERICA MSRP PRICING USD METER	FOOT	EACH	BOX
*	URCEP0038-01	40000	1574 13/16"	1	460 x 170 x 120	18 1/8" x 6 3/4" x 4 3/4"	4.00	8.82	5.362	1.634	214.480	214.480
**	URCEP0039-01	40000	1574 13/16"	1	460 x 170 x 120	18 1/8" x 6 3/4" x 4 3/4"	3.30	7.28	5.362	1.634	214.480	214.480

CF.6628-XX/01

COMPLETE KIT OF BOLT AND ADJUSTER FOR 6628

KIT COMPLET DE BOULON ET AJUSTEUR POUR 6628

KIT COMPLETO DE TORNILLO Y REGULADOR PARA 6628

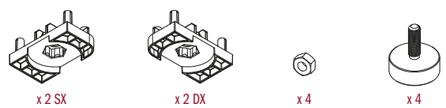

ITEM NUMBER	KIT PER BOX	BOX DIMENSION mm W x D x H	BOX DIMENSION inch W x D x H	BOX WEIGHT KG	BOX WEIGHT LB	STOCK IN AMERICA MSRP PRICING USD KIT	BOX
UCF.6628-06/01	10	220 x 190 x 160	8 5/8" x 7 1/2" x 6 1/4"	2.57	5.67	104.201	1042.010

CF.CSA0016-01

COMPLETE KIT OF JOINING BLOCK AND SCREW FOR STRUCTURE 55X31

KIT COMPLET DE BLOC D'ASSEMBLAGE ET VIS POUR STRUCTURE 51x31

KIT COMPLETO DE BLOQUE DE UNIÓN Y TORNILLO PARA ESTRUCTURA 51x31

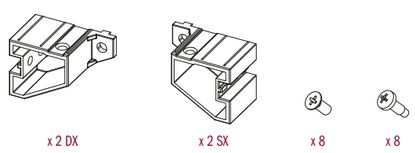

ITEM NUMBER	KIT PER BOX	BOX DIMENSION mm W x D x H	BOX DIMENSION inch W x D x H	BOX WEIGHT KG	BOX WEIGHT LB	STOCK IN AMERICA MSRP PRICING USD KIT	BOX
UCF.CSA0016-01	10	220 x 190 x 160	8 5/8" x 7 1/2" x 6 1/4"	3.60	7.94	31.424	314.240

CF.6630-XX/02

COMPLETE KIT OF CAP BOLT AND ADJUSTER FOR 6630

KIT COMPLET DE BOULON CAPUCHON ET AJUSTEUR POUR 6630

KIT COMPLETO DE TORNILLO TAPA Y REGULADOR PARA 6630

ITEM NUMBER	KIT PER BOX	BOX DIMENSION mm W x D x H	BOX DIMENSION inch W x D x H	BOX WEIGHT KG	BOX WEIGHT LB	STOCK IN AMERICA MSRP PRICING USD KIT	STOCK IN AMERICA MSRP PRICING USD BOX
UCF.6630-06/02	10	220 x 190 x 160	8 5/8" x 7 1/2" x 6 1/4"	1.18	2.60	29.544	295.440

CF.CSA0017-01

COMPLETE KIT OF JOINING BLOCK AND SCREW FOR 6630 - 6632 - 6633 - 7590

KIT COMPLET DE BLOC D'ASSEMBLAGE ET VIS POUR 6630 - 6632 - 6633 - 7590

KIT COMPLETO DE BLOQUE DE UNIÓN Y TORNILLO PARA 6630 - 6632 - 6633 - 7590

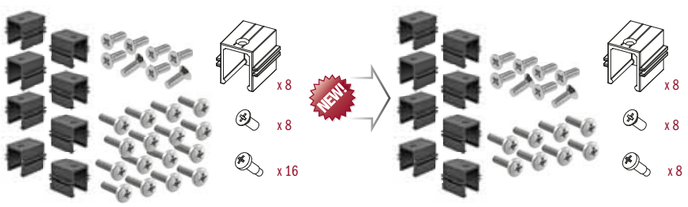

ITEM NUMBER	KIT PER BOX	BOX DIMENSION mm W x D x H	BOX DIMENSION inch W x D x H	BOX WEIGHT KG	BOX WEIGHT LB	STOCK IN AMERICA MSRP PRICING USD KIT	STOCK IN AMERICA MSRP PRICING USD BOX
UCF.CSA0017-01	10	220 x 190 x 160	8 5/8" x 7 1/2" x 6 1/4"	4.60	10.14	40.453	404.530

PROJECT2 55X31

CABINET BASES

ISLAND

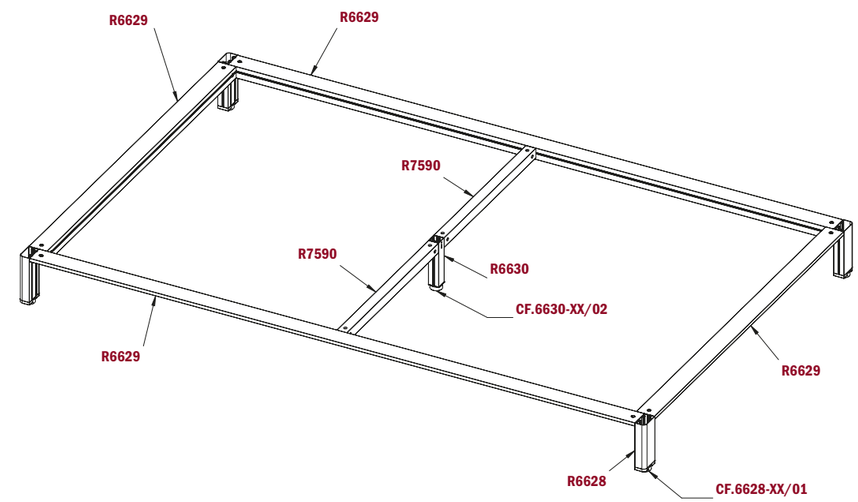

ISLAND WITH SIDES

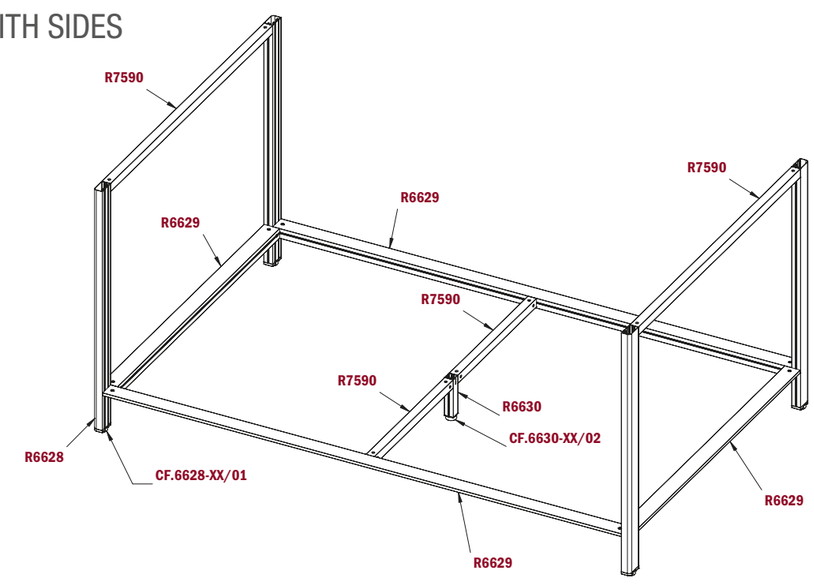

PROJECT2 55X31

CABINET BASES

ISLAND

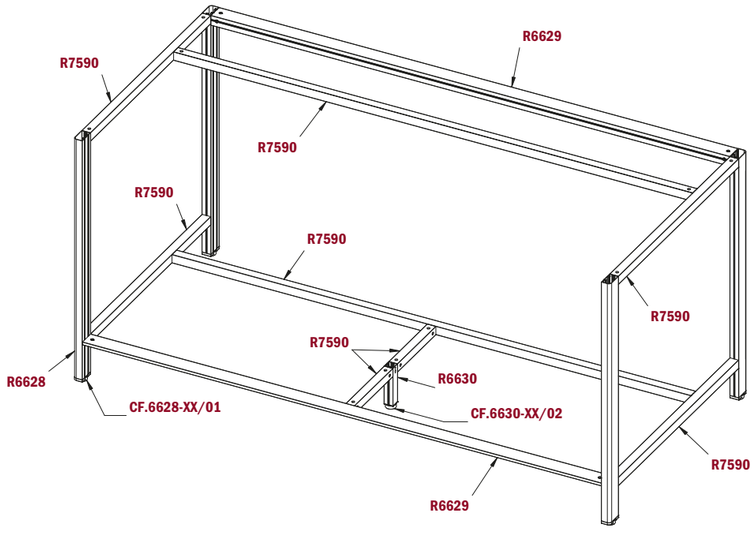

WALL LINEAR

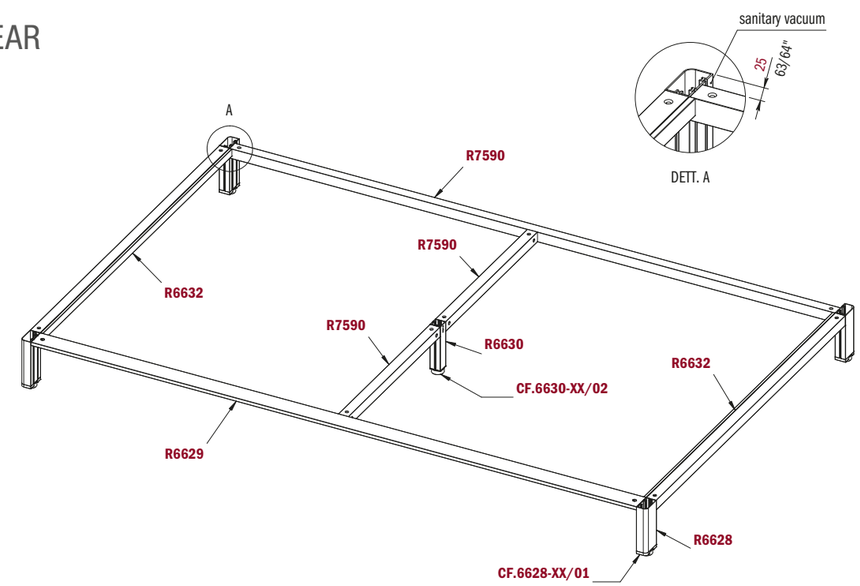

PENINSULA TABLE

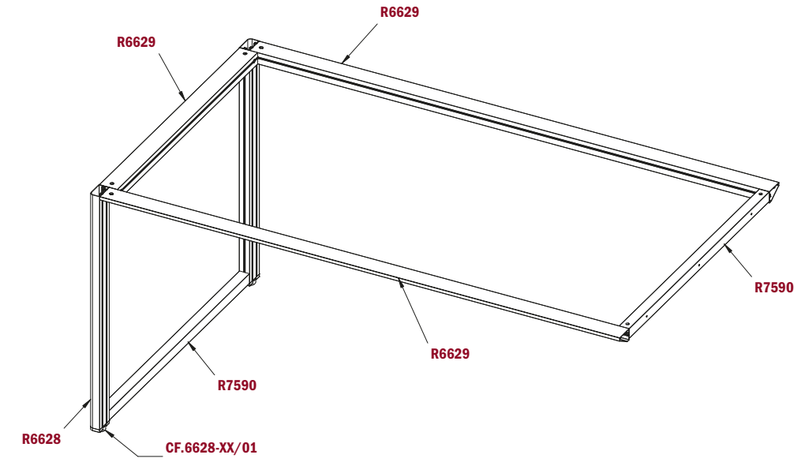

THE DIFFERENCE IN THE KITCHEN

STRIKE ALUMINUM SHELVING SYSTEMS

STRIKE

“Strike” is an innovative system for creating aluminum shelves for cabinets and closets.
The “no tool” assembly joints system allows you to build shelves in just a few minutes.
Every lateral profile is designed to receive a plastic insert that fits perfectly onto the shelf holders.

The “Strike” system can also be assembled as a lighted version with LED strips, not included.
This enables you to provide lighted shelves which illuminate the closet thus not having to install any secondary light.
Every shelf can support more than 88 lbs (40 kgs).

STRIKE

“Strike” est un système innovateurs pour la création d’étagères en aluminium pour les armoires et les placards. Le système de joint d’assemblage “pas d’outil” vous permet de construire des étagères dans quelques minutes. Chaque profilé latéral est conçu pour recevoir un insert en plastique qui s’adapte parfaitement sur les supports d’étagère.

Le système “Srtike” peut également être assemblé en version éclairé avec bandes de LED, non incluses.
Cela vous permet de fournir des d’étagères éclairées qui illuminent le placard donc il n’est pas nécessaire d’installer un éclairage secondaire.
Chaque d’étagère peut supporter plus de 88 lbs (40 kg).

STRIKE

“Strike”, es un innovador sistema de estanterías de aluminio para la creación de muebles, estanterias y armarios.
El sistema de montage “sin herramientas” permiten construir una plataforma en pocos minutos.
Todos los perfiles laterales llevan un canal donde se inserta un soporte en plástico que se adapta a todas las medidadas de loss soportes de balda.

El sistema “Strike” también puede ser ensamblado como una versión iluminada con bandas LED (no incluidas)
Esto permite el suministro de repisas que iluminen el closet y así no tener que instalar ninguna luz secundaria.
Cada repisa puede soportar 88 lb (40 kg)

6583G - OPEN (❶)

"STRIKE 28" ALUMINUM SHELVING SYSTEMS

"STRIKE 28" FRONT ALUMINUM PROFILE FOR SHELF
50S Aluminum Clear Anodize
Other Colors Available FROM ITALY

(❶) ONE GASKET INCLUDED

"STRIKE 28" SYSTÈME D'ÉTAGÈRES EN ALUMINIUM

"STRIKE 28" PROFILÉ AVANT EN ALUMINUM POUR ÉTAGÈRE
50S Aluminium Clair Anodisé
Autres Couleurs Disponibles DE L'ITALIE

(❶) *UN JOINT D'ÉTANCHÉITÉ INCLUS*

"STRIKE 28" DE ALUMINIO SISTEMA DE ESTANTERÍA

PERFIL DELANTERO "STRIKE 28" EN ALUMINIO PARA BALDA
50S Aluminio Anodizado Claro
Otros Colores Disponibles DE ITALIA

(❶) UNA GUARNICION INCLUIDA

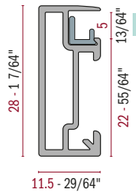

SEAL GASKET FOR 4 MM GLASS
2357AGV

COLORS	ITEM NUMBER	LENGTH mm	LENGTH inch	PCS PER BOX	BOX DIMENSION mm W x D x H	BOX DIMENSION inch W x D x H	BOX WEIGHT KG	BOX WEIGHT LB	STOCK IN AMERICA MSRP PRICING USD METER	FOOT	EACH	BOX
50S	U6583G50SL41	4100	161 7/16"	10	4250 x 95 x 65	167 3/8" x 3 3/4" x 2 1/2"	14.00	30.86	17.148	5.227	70.307	703.068

6584G CLOSED (❶)

"STRIKE 28" REAR ALUMINUM PROFILE FOR SHELF
50S Aluminum Clear Anodize
Other Colors Available FROM ITALY

(❶) ONE GASKET INCLUDED

"STRIKE 28" PROFILÉ ARRIÈRE EN ALUMINUM POUR ÉTAGÈRE
50S Aluminium Clair Anodisé
Autres Couleurs Disponibles DE L'ITALIE

(❶) *UN JOINT D'ÉTANCHÉITÉ INCLUS*

PERFIL TRASERO "STRIKE 28" EN ALUMINIO PARA BALDA
50S Aluminio Anodizado Claro
Otros Colores Disponibles DE ITALIA

(❶) UNA GUARNICION INCLUIDA

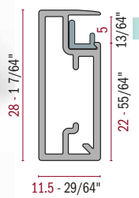

SEAL GASKET FOR 4 MM GLASS
2357AGV

COLORS	ITEM NUMBER	LENGTH mm	LENGTH inch	PCS PER BOX	BOX DIMENSION mm W x D x H	BOX DIMENSION inch W x D x H	BOX WEIGHT KG	BOX WEIGHT LB	STOCK IN AMERICA MSRP PRICING USD METER	FOOT	EACH	BOX
50S	U6584G50SL41	4100	161 7/16"	10	4250 x 95 x 65	167 3/8" x 3 3/4" x 2 1/2"	15.00	33.07	17.592	5.362	72.127	721.272

6608

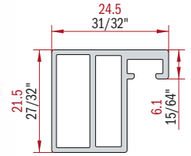

"STRIKE" LATERAL ALUMINUM PROFILE FOR SHELF
50S Aluminum Clear Anodize
Other Colors Available FROM ITALY

"STRIKE" PROFILÉ LATÉRAL EN ALUMINIUM POUR ÉTAGÈRE
50S Aluminium Clair Anodisé
Autres Couleurs Disponibles DE L'ITALIE

PERFIL LATERAL "STRIKE" PARA BALDA
50S Aluminio Anodizado Claro
Otros Colores Disponibles DE ITALIA

COLORS	ITEM NUMBER	LENGTH mm	LENGTH inch	PCS PER BOX	BOX DIMENSION mm W x D x H	BOX DIMENSION inch W x D x H	BOX WEIGHT KG	BOX WEIGHT LB	STOCK IN AMERICA MSRP PRICING USD METER	FOOT	EACH	BOX
50S	U660850SL27	2670	105 1/8"	10	2740 x 95 x 65	107 7/8" x 3 3/4" x 2 1/2"	7.50	16.53	20.802	6.340	55.541	555.413
50S	U660850SL41	4100	161 7/16"	10	4250 x 95 x 65	167 3/8" x 3 3/4" x 2 1/2"	13.00	28.66	20.532	6.258	84.181	841.812

2357AGV

"STRIKE 28" ALUMINUM SHELVING SYSTEMS

REPLACEMENT GASKET FOR ALUMINUM DOOR PROFILE
For 4 mm glass

"STRIKE 28" SYSTÈME D'ÉTAGÈRES EN ALUMINIUM

JOINT D'ÉTANCHÉITÉ DE REMPLACEMENT POUR PROFILÉ EN ALUMINIUM DE PORTE
Pour verre 4 mm

"STRIKE 28" DE ALUMINIO SISTEMA DE ESTANTERÍA

GUARNICION PARA PERFILES DE ALUMINIO PARA PUERTAS
Para vidrio de 4 mm

COLORS	ITEM NUMBER	LENGTH mm	LENGTH inch	PCS PER BOX	BOX DIMENSION mm W x D x H	BOX DIMENSION inch W x D x H	BOX WEIGHT KG	BOX WEIGHT LB	STOCK IN AMERICA MSRP PRICING USD METER	FOOT	EACH	BOX
	UR2357AGV.01	1283	50 1/2"	50	1330 x 95 x 65	52 3/8" x 3 3/4" x 2 1/2"	1.10	2.43	4.601	1.402	5.903	295.154

2364AGV

REPLACEMENT GASKET FOR ALUMINUM DOOR PROFILE
For 3 mm glass

JOINT D'ÉTANCHÉITÉ DE REMPLACEMENT POUR PROFILÉ EN ALUMINIUM DE PORTE
Pour verre 3 mm

GUARNICION PARA PERFILES DE ALUMINIO PARA PUERTAS
Para vidrio de 3 mm

COLORS	ITEM NUMBER	LENGTH mm	LENGTH inch	PCS PER BOX	BOX DIMENSION mm W x D x H	BOX DIMENSION inch W x D x H	BOX WEIGHT KG	BOX WEIGHT LB	STOCK IN AMERICA MSRP PRICING USD METER	FOOT	EACH	BOX
	UR2364AGV.14	1400	55 1/8"	50	1508 x 95 x 65	59 3/8" x 3 3/4" x 2 1/2"	1.28	2.82	4.576	1.395	6.406	320.320

CFT6584 02

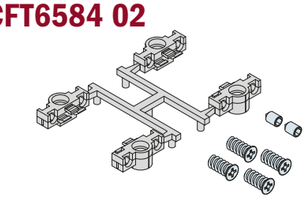

STRUCTURAL JUNCTION KIT FOR "STRIKE"

ENSAMBLE DE JONCTION STRUCTURAL POUR ÉTAGÈRE "STRIKE"

CONJUNTO DE CONEXIONES ESTRUCTURAL "STRIKE"

ITEM NUMBER	KIT PER BOX	BOX DIMENSION mm W x D x H	BOX DIMENSION inch W x D x H	BOX WEIGHT KG	BOX WEIGHT LB	STOCK IN AMERICA MSRP PRICING USD KIT	BOX
UCFT6584/02*	20	220 x 165 x 140	8 5/8" x 6 1/2" x 5 1/2"	1.00	2.20	3.664	73.280

CFT6584 06

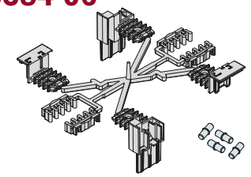

"STRIKE 28" ALUMINUM SHELVING SYSTEMS

JUNCTION AND HOLDER KIT FOR "STRIKE" SHELF OPTION 1 (SEE DESIGN) "OPEN/CLOSED" WITH 6608

"STRIKE 28" SYSTÈME D'ÉTAGÈRES EN ALUMINIUM

ENSEMBLE DE JONCTION ET SUPPORT POUR ÉTAGÈRE "STRIKE" OPTION 1 (VOIR DESIGN) "OUVERT/FERMÉ" AVEC 6608

"STRIKE 28" DE ALUMINIO SISTEMA DE ESTANTERÍA

CONJUNTO DE CONEXIONES Y SOPORTE "STRIKE" OPCIÓN 1 (VER DISEÑO) "ABIERTO / CERRADO" CON 6608

ITEM NUMBER	KIT PER BOX	BOX DIMENSION mm W x D x H	BOX DIMENSION inch W x D x H	BOX WEIGHT KG	BOX WEIGHT LB	STOCK IN AMERICA MSRP PRICING USD KIT	STOCK IN AMERICA MSRP PRICING USD BOX
UCFT6584/06	20	220 x 165 x 140	8 5/8" x 6 1/2" x 5 1/2"	1.00	2.20	4.728	94.560

OPTION 1 "OPEN/CLOSED"

6583G + 6584G + 6608 + CFT6584/06

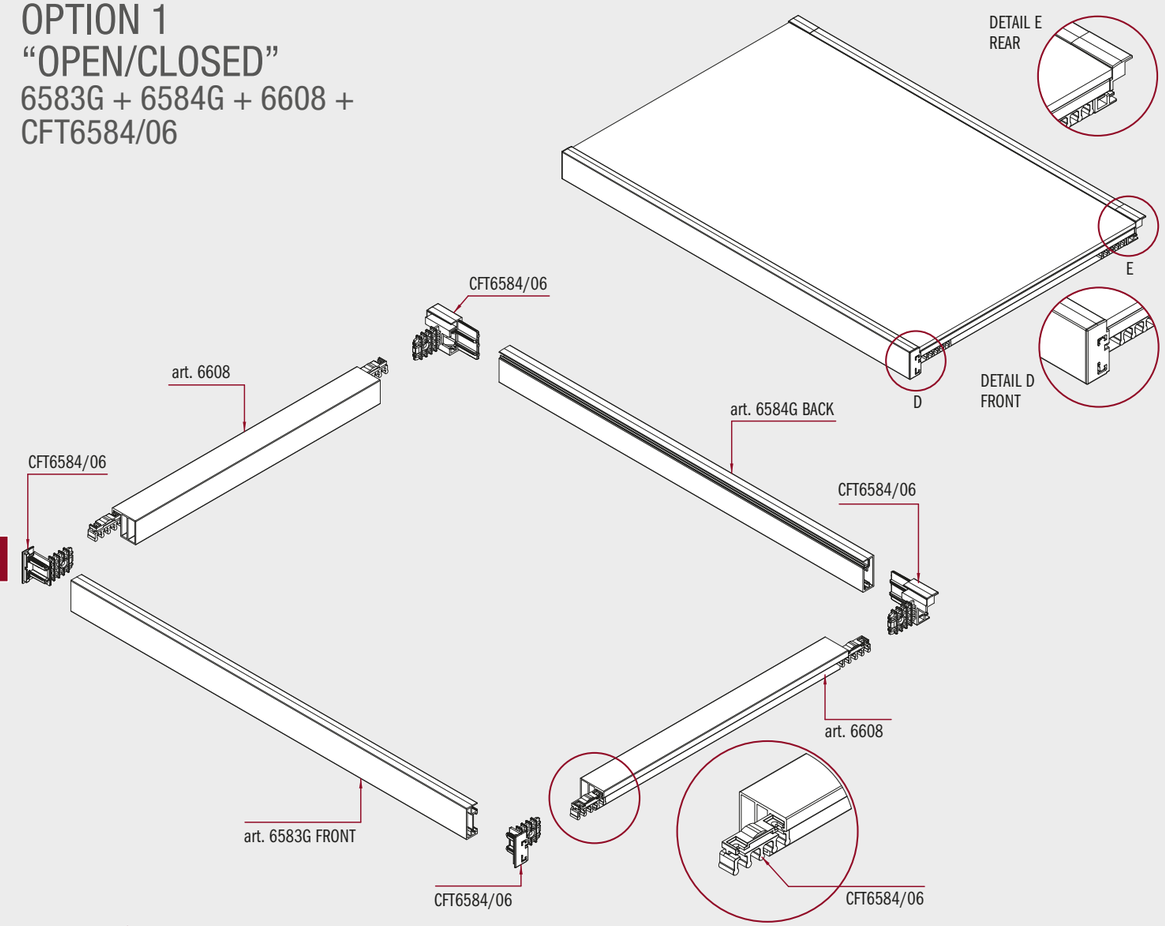

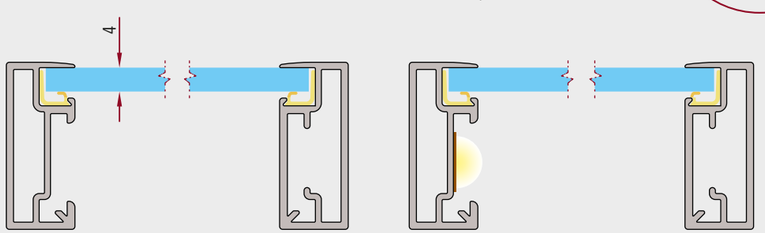

CFT6583 01

"STRIKE 28" ALUMINUM SHELVING SYSTEMS

JUNCTION AND HOLDER KIT FOR "STRIKE" SHELF OPTION 2 (SEE DESIGN) "OPEN/OPEN" WITH 6608

"STRIKE 28" SYSTÈME D'ÉTAGÈRES EN ALUMINIUM

ENSEMBLE DE JONCTION ET SUPPORT POUR ÉTAGÈRE "STRIKE" OPTION 2 (VOIR DESIGN) "OUVERT/OUVERT" AVEC 6608

"STRIKE 28" DE ALUMINIO SISTEMA DE ESTANTERÍA

CONJUNTO DE CONEXIONES Y SOPORTE "STRIKE" OPCIÓN 2 (VER DISEÑO) "ABIERTO / ABIERTO" CON 6608

ITEM NUMBER	KIT PER BOX	BOX DIMENSION mm W x D x H	BOX DIMENSION inch W x D x H	BOX WEIGHT KG	BOX WEIGHT LB	STOCK IN AMERICA MSRP PRICING USD KIT	STOCK IN AMERICA MSRP PRICING USD BOX
UCFT6583/01	20	220 x 165 x 140	8 5/8" x 6 1/2" x 5 1/2"	1.00	2.20	3.957	79.140

OPTION 2 "OPEN/OPEN"

6583G + 6583G + 6608 + CFT6583/01

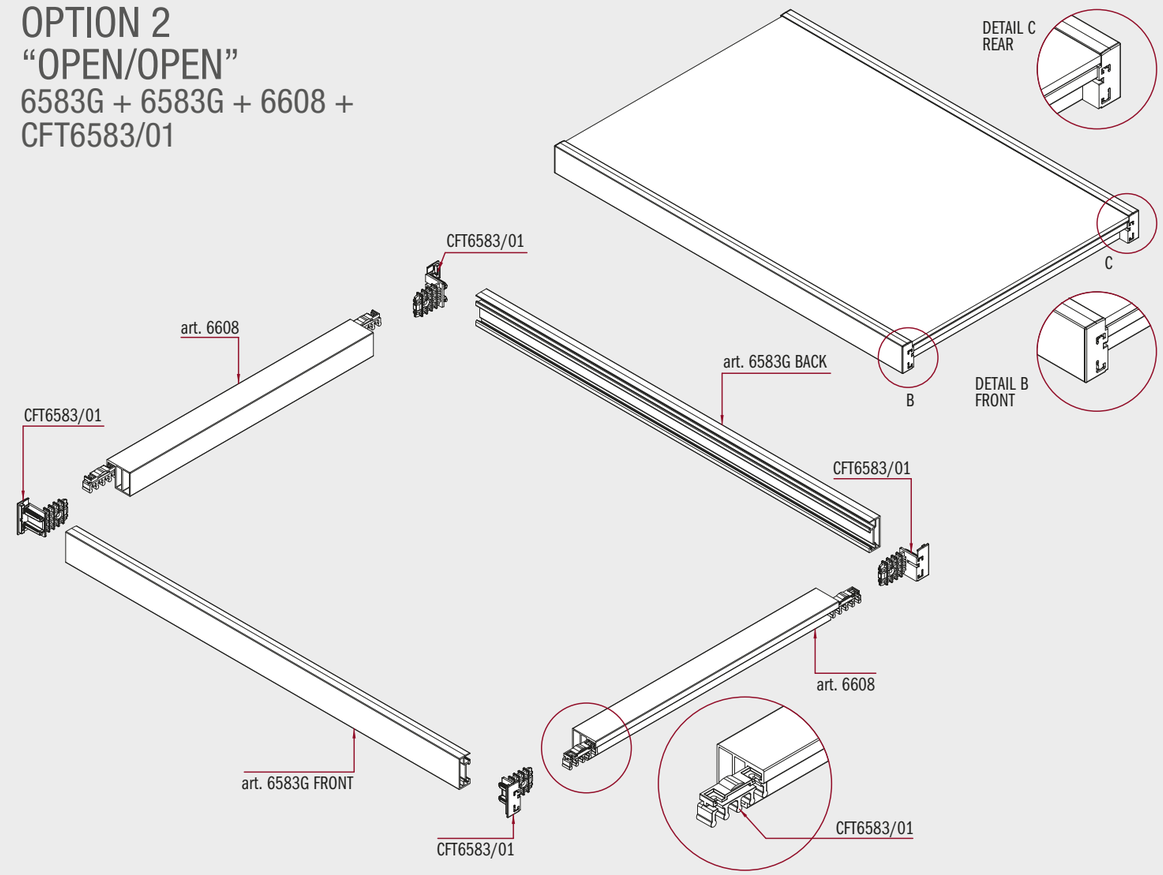

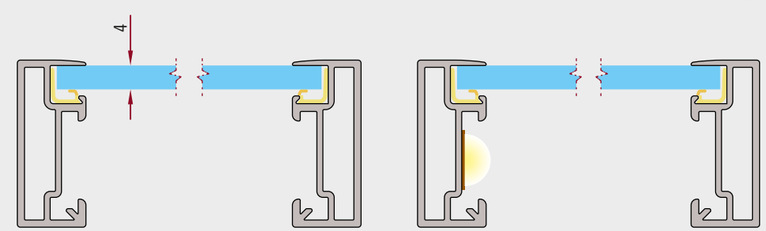

1751

ALUMINUM PROFILE FOR SHELVES

ALUMINUM PROFILE FOR SHELVES
Aluminum profile for shelves.
50S Aluminium clear anodize
Other Colors Available FROM ITALY

PROFIL PROTECTION BORD ETAGÈRE

PROFIL PROTECTION BORD ETAGÈRE
Profil protection bord étagère en aluminium.
50S *Aluminium clair anodisé*
Autres Couleurs Disponibles DE L'ITALIE

PERFIL FRONTAL EN ALUMINIO PARA BALDA

PERFIL FRONTAL EN ALUMINIO PARA BALDA
Perfil frontal en aluminio para balda.
50S Aluminio anodizado claro
Otros Colores Disponibles DE ITALIA

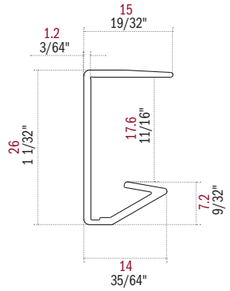

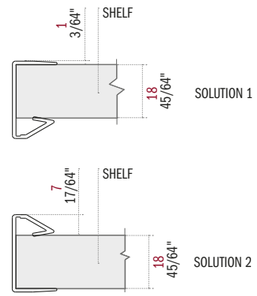

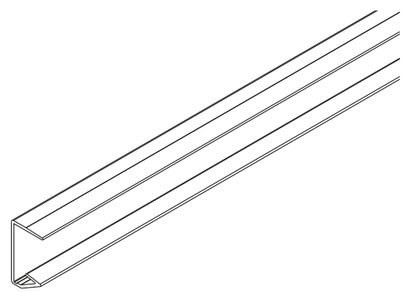

COLORS	ITEM NUMBER	LENGTH		PCS PER BOX	BOX DIMENSION		BOX WEIGHT		STOCK IN AMERICA MSRP PRICING USD			
					mm	inch						
		mm	inch		W x D x H	W x D x H	KG	LB	METER	FOOT	EACH	BOX
50S	U175150SL27	2670	105 1/8"	10	2720 x 145 x 44	107 1/8" x 5 3/4" x 1 3/4"	5.90	13.01	12.837	3.913	34.275	342.748
50S	U175150SL41	4100	161 7/16"	10	4150 x 145 x 44	163 3/8" x 5 3/4" x 1 3/4"	8.50	18.74	12.007	3.660	49.229	492.287

1760

ALUMINUM PROFILE FOR SHELVES

ALUMINUM PROFILE FOR SHELVES
Aluminum profile for shelves.
50S Aluminium clear anodize
Other Colors Available FROM ITALY

PROFIL PROTECTION BORD ETAGÈRE

PROFIL PROTECTION BORD ETAGÈRE
Profil protection bord étagère en aluminium.
50S *Aluminium clair anodisé*
Autres Couleurs Disponibles DE L'ITALIE

PERFIL FRONTAL EN ALUMINIO PARA BALDA

PERFIL FRONTAL EN ALUMINIO PARA BALDA
Perfil frontal en aluminio para balda.
50S Aluminio anodizado claro
Otros Colores Disponibles DE ITALIA

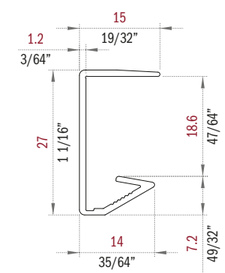

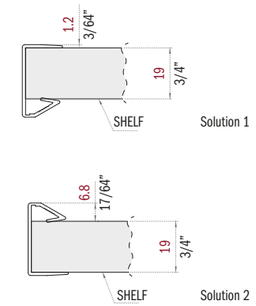

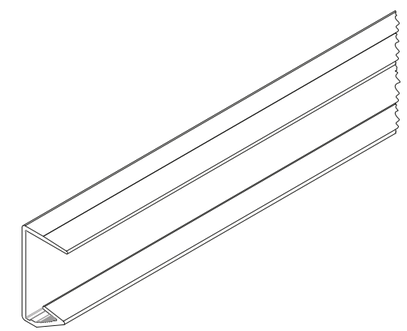

COLORS	ITEM NUMBER	LENGTH		PCS PER BOX	BOX DIMENSION		BOX WEIGHT		STOCK IN AMERICA MSRP PRICING USD			
					mm	inch						
		mm	inch		W x D x H	W x D x H	KG	LB	METER	FOOT	EACH	BOX
50S	U176050SL27	2670	105 1/8"	10	2720 x 145 x 44	107 1/8" x 5 3/4" x 1 3/4"	5.50	12.13	13.309	4.057	35.535	355.350
50S	U176050SL41	4100	161 7/16"	10	4150 x 145 x 44	163 3/8" x 5 3/4" x 1 3/4"	7.50	16.53	12.329	3.758	50.549	505.489

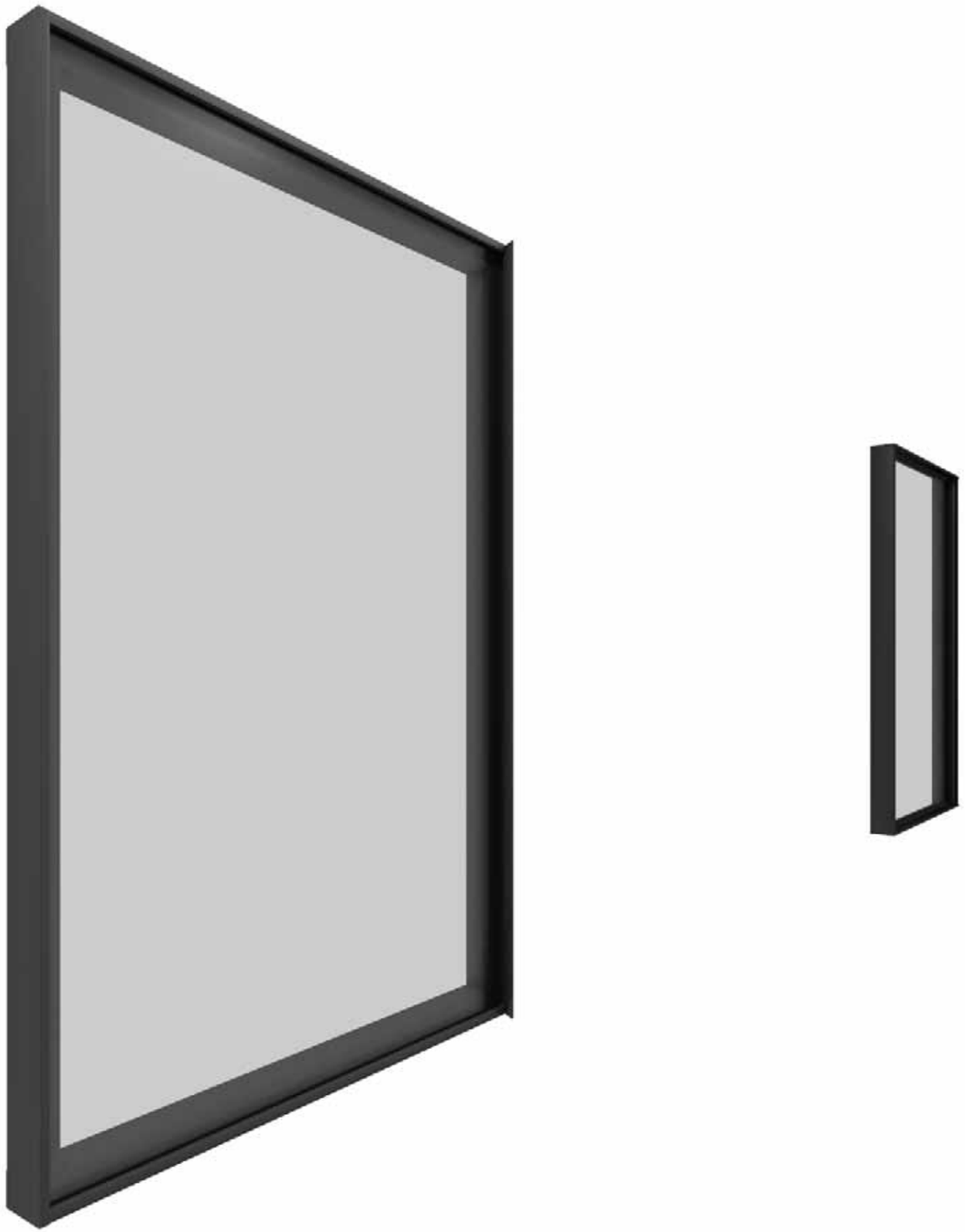

DOOR FRAMES

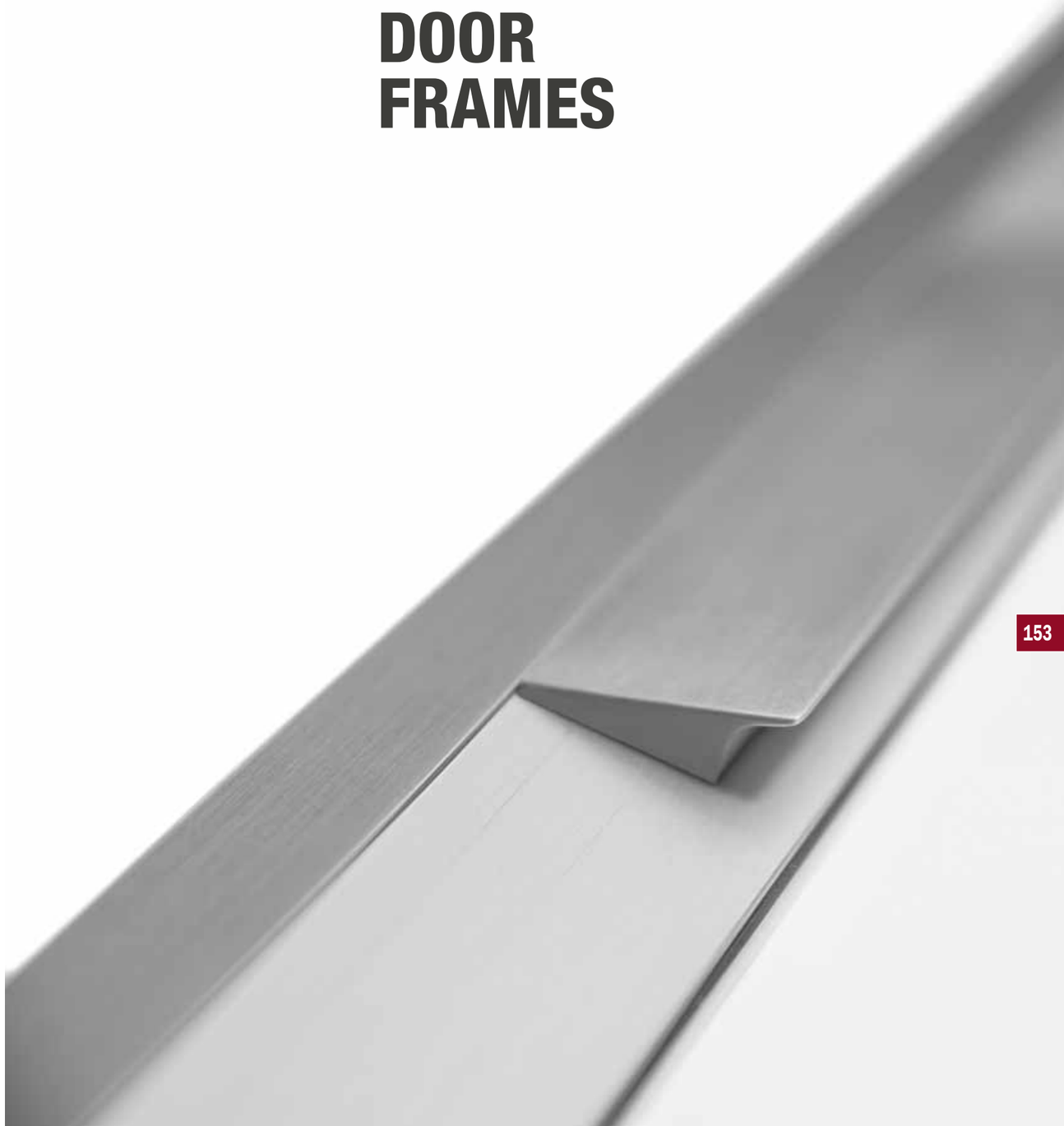

2606

PROFILE FOR CONCEALED HINGES SUPPORT
50S Aluminum Clear Anodize
S2I Aluminum Titanium Anodize
V12 Aluminum Black Matt Powder Coated
Attention: our flat head screws VAN3.5x9.5TP must be used to install the air hinge and that screws are included in the pre machined profile

PROFIL POUR SUPPORT DE CHARNIÈRES INVISIBLES
50S Aluminium Clair Anodisé
S2I Aluminium Titanium Anodize
V12 Aluminium Noir Mat Peint à Poudre
Attention : a

PERFIL PARA SOPORTE DE BISAGRAS OCULTAS
50S Aluminio Anodizado Claro
S2I Aluminio Anodizado Titanio
V12 Aluminio Negro Mate Barnizado
Atención: a

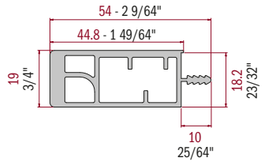

COLORS	ITEM NUMBER	LENGTH mm	LENGTH inch	PCS PER BOX	BOX DIMENSION mm W x D x H	BOX DIMENSION inch W x D x H	BOX WEIGHT KG	BOX WEIGHT LB	STOCK IN AMERICA MSRP PRICING USD METER	FOOT	EACH	BOX
50S	U260650SL27	2670	105 1/8"	6	2720 x 120 x 85	107 1/8" x 4 3/4" x 3 3/8"	16	35.27	37.546	11.444	100.248	601.487
S2I	U2606S2IL27	2670	105 1/8"	6	2720 x 120 x 85	107 1/8" x 4 3/4" x 3 3/8"	16	35.27	51.741	15.771	138.148	828.891
V12	U2606V12L27	2670	105 1/8"	6	2720 x 120 x 85	107 1/8" x 4 3/4" x 3 3/8"	16	35.27	42.741	13.027	114.118	684.711

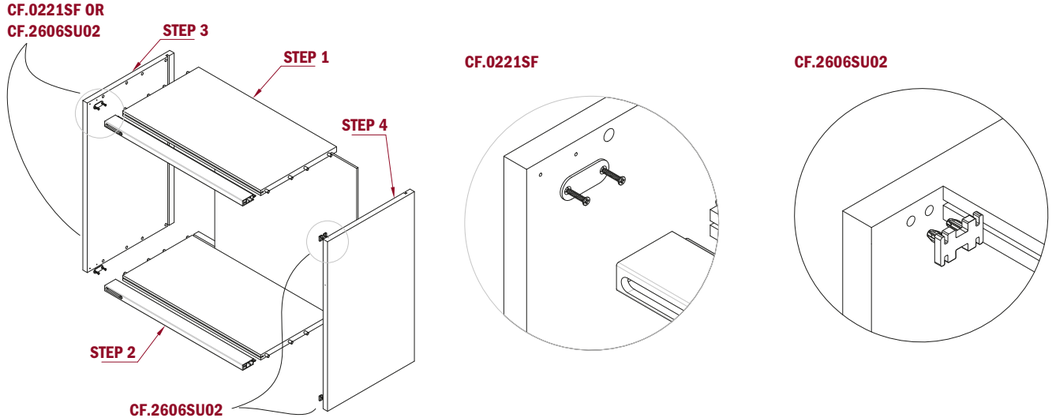

CF.2606SU02

ANTI-ROTATION SUPPORT FOR 2606 PROFILE WITH 5mm DOWEL

SUPPORT ANTI-ROTATION POUR PROFIL 2606 AVEC CHEVILLE DE 5mm

SOPORTE ANTIROTACIÓN PARA PERFIL 2606 CON ABAJO DE 5mm

ITEM NUMBER	PCS PER BOX	BOX DIMENSION mm W x D x H	BOX DIMENSION inch W x D x H	BOX WEIGHT KG	BOX WEIGHT LB	STOCK IN AMERICA *** NET USD *** KIT	BOX
UCF.2606SU02	20	150 x 100 x 90	6" x 4" x 3 3/8"	0.25	0.55	1.250	25.000

CF.0221SF

SET ANTI-TIP PLATES AND SCREWS FOR 2606 PROFILE
Attention: before inserting the 2606 profile fix plates and screws on the cabinet sides

JEU DE PLAQUES ANTI-BASCULEMENT ET DE VIS POUR PROFIL 2606
Attention : avant d'insérer les plaques du profilé 2606 et les vis sur les côtés du meuble

JUEGO DE PLACAS ANTIVUELCO Y TORNILLOS PARA PERFIL 2606
Atención: antes de insertar el perfil 2606 fijar placas y tornillos en los laterales del mueble

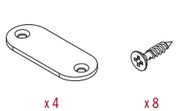

ITEM NUMBER	KIT PER BOX	BOX DIMENSION mm W x D x H	BOX DIMENSION inch W x D x H	BOX WEIGHT KG	BOX WEIGHT LB	STOCK IN AMERICA MSRP PRICING USD KIT	BOX
UCF.0221SF	20	145 x 95 x 85	5 3/4" x 3 3/4" x 3 3/8"	0.51	1.12	3.386	67.720

2606

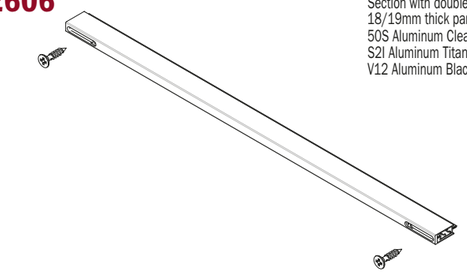

PROFILE FOR CONCEALED HINGES SUPPORT
Section with double hinge housing for 18/19mm thick panels
50S Aluminum Clear Anodize
S2I Aluminum Titanium Anodize
V12 Aluminum Black Matt Powder Coated

PROFIL POUR SUPPORT DE CHARNIÈRES INVISIBLES
Section à double charnière pour panneaux d'épaisseur 18/19mm
50S Aluminium Clair Anodisé
S2I Aluminium Titanium Anodize
V12 Aluminium Noir Mat Peint à Poudre

PERFIL PARA SOPORTE DE BISAGRAS OCULTAS
Sección de doble bisagra para paneles de 18/19 mm de espesor
50S Aluminio Anodizado Claro
S2I Aluminio Anodizado Titanio
V12 Aluminio Negro Mate Barnizado

Scilm America Flat Head Screws VAN3.5x9.5TP must be used to install the air hinge. Screws are included with the premachined profiles.

COLORS	ITEM NUMBER	OUTSIDE CABINET SIZE WITH 19mm PANELS mm	OUTSIDE CABINET SIZE WITH 19mm PANELS inch	LENGTH mm	LENGTH inch	PCS PER BOX	BOX DIMENSION mm W x D x H	BOX DIMENSION inch W x D x H	BOX WEIGHT KG	BOX WEIGHT LB	STOCK IN AMERICA MSRP PRICING USD METER	FOOT	EACH	BOX
50S	U260650S.0021	762	30"	722.7	28 29/64"	6	770 x 120 x 85	30 3/8 " x 4 3/4 " x 3 3/8 "	4.50	9.92			62.249	373.494
50S	U260650S.0022	914.4	36"	875.1	34 29/64"	6	925 x 120 x85	36 3/8" x 4 3/4" x 3 3/8"	5.50	12.13			67.220	403.320
50S	U260650S.0023	1066.8	42"	1027.5	40 29/64"	6	1070 x 120 x 85	42 1/8" x 4 3/4" x 3 3/8"	6.50	14.33			76.165	456.990
50S	U260650S.0024	1219.2	48"	1179.9	46 29/64"	6	1230 x 120 x 85	48 3/8" x 4 3/4" x 3 3/8"	7.00	15.43			76.165	456.990
S2I	U2606S2I.0021	762	30"	722.7	28 29/64"	6	770 x 120 x 85	30 3/8" x 4 3/4" x 3 3/8"	4.50	9.92			67.254	403.524
S2I	U2606S2I.0022	914.4	36"	875.1	34 29/64"	6	925 x 120 x 85	36 3/8" x 4 3/4" x 3 3/8"	5.50	12.13			73.476	440.856
S2I	U2606S2I.0023	1066.8	42"	1027.5	40 29/64"	6	1070 x 120 x 85	42 1/8" x 4 3/4" x 3 3/8"	6.50	14.33			84.506	507.036
S2I	U2606S2I.0024	1219.2	48"	1179.9	46 29/64"	6	1230 x 120 x 85	48 3/8" x 4 3/4" x 3 3/8"	7.00	15.43			84.506	507.036
V12	U2606V12.0021	762	30"	722.7	28 29/64"	6	770 x 120 x 85	30 3/8" x 4 3/4" x 3 3/8"	4.50	9.92			62.500	375.000
V12	U2606V12.0022	914.4	36"	875.1	34 29/64"	6	925 x 120 x 85	36 3/8" x 4 3/4" x 3 3/8"	5.50	12.13			67.533	405.198
V12	U2606V12.0023	1066-.8	42"	1027.5	40 29/64"	6	1070 x 120 x 85	42 1/8" x 4 3/4" x 3 3/8"	6.50	14.33			76.582	459.492
V12	U2606V12.0024	1219.2	48"	1179.9	46 29/64"	6	1230 x 120 x 85	48 3/8" x 4 3/4" x 3 3/8"	7.00	15.43			76.582	459.492

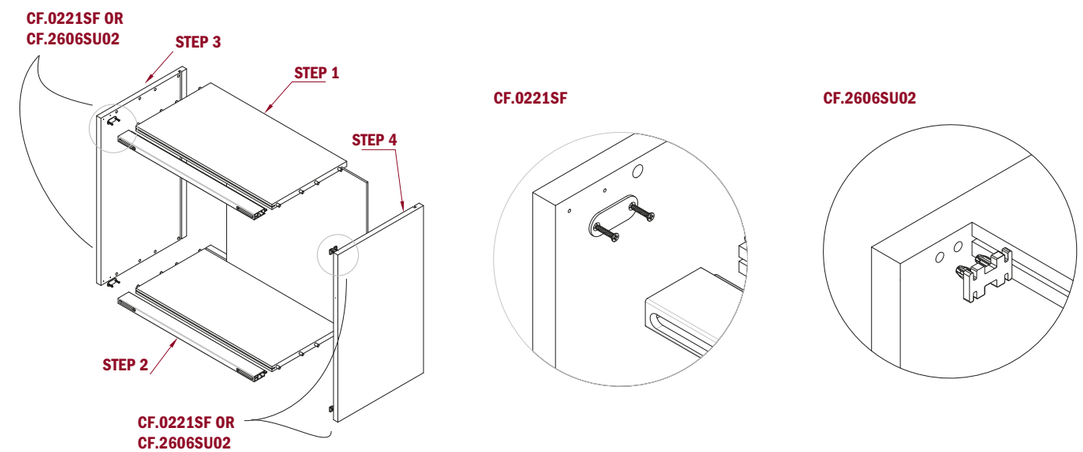

CF.2606SU02

ANTI-ROTATION SUPPORT FOR 2606 PROFILE WITH 5mm DOWEL

SUPPORT ANTI-ROTATION POUR PROFIL 2606 AVEC CHEVILLE DE 5mm

SOPORTE ANTIROTACIÓN PARA PERFIL 2606 CON ABAJO DE 5mm

ITEM NUMBER	PCS PER BOX	BOX DIMENSION mm W x D x H	BOX DIMENSION inch W x D x H	BOX WEIGHT KG	BOX WEIGHT LB	STOCK IN AMERICA *** NET USD *** KIT	BOX
UCF.2606SU02	20	150 x 100 x 90	6" x 4" x 3 3/8"	0.25	0.55	1.250	25.000

CF.0221SF

SET ANTI-TIP PLATES AND SCREWS FOR 2606 PROFILE
Attention: before inserting the 2606 profile fix plates and screws on the cabinet sides

JEU DE PLAQUES ANTI-BASCULEMENT ET DE VIS POUR PROFIL 2606
Attention : avant d'insérer les plaques du profilé 2606 et les vis sur les côtés du meuble

JUEGO DE PLACAS ANTIVUELCO Y TORNILLOS PARA PERFIL 2606
Atención: antes de insertar el perfil 2606 fijar placas y tornillos en los laterales del mueble

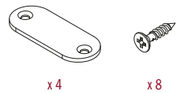

ITEM NUMBER	KIT PER BOX	BOX DIMENSION mm W x D x H	BOX DIMENSION inch W x D x H	BOX WEIGHT KG	BOX WEIGHT LB	STOCK IN AMERICA MSRP PRICING USD KIT	STOCK IN AMERICA MSRP PRICING USD BOX
UCF.0221SF	20	145 x 95 x 85	5 3/4" x 3 3/4" x 3 3/8"	0.51	1.12	3.386	67.720

PROCESSING 2606

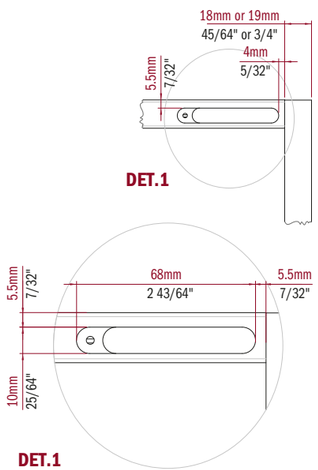

WOODEN DOOR PROCESSING

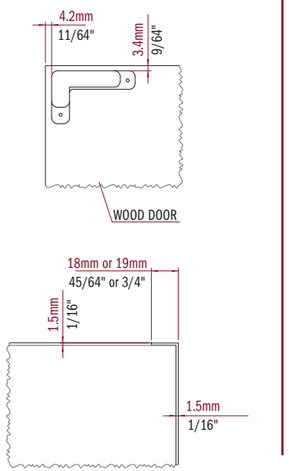

ALUMINUM DOOR PROCESSING

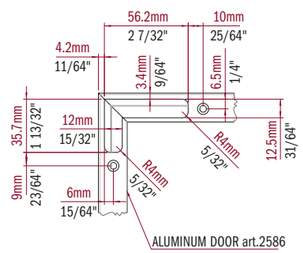

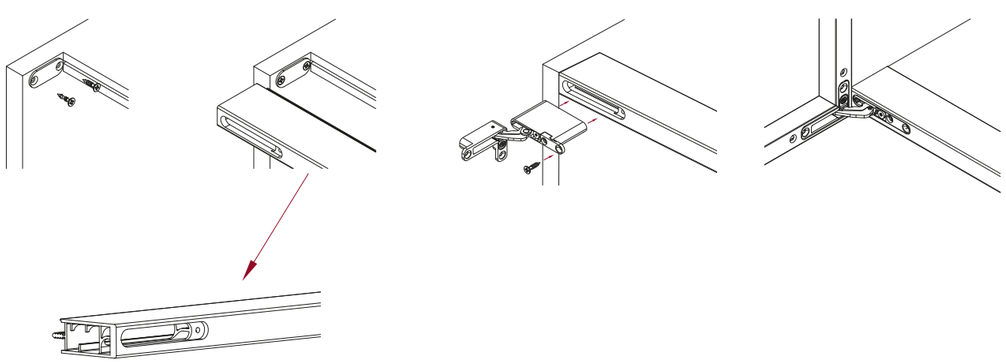

CF.0221SF

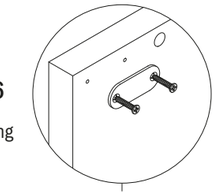

PANNEL 18 mm

TECHNICAL SPECIFICATION 2606

∗ **ATTENTION:** the overlap must be facing inside the cabinet

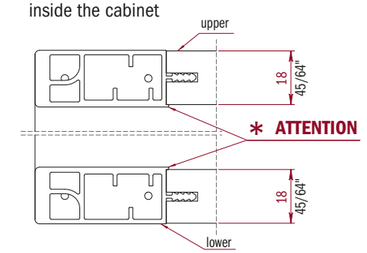

WALL UNIT PROCESSING SPECIFICATIONS

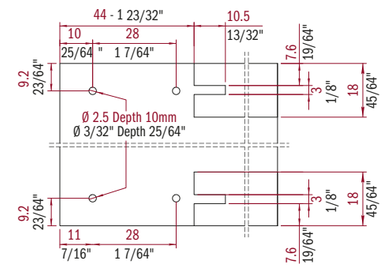

PANNEL 19 mm

ATTENTION: edged pannel.

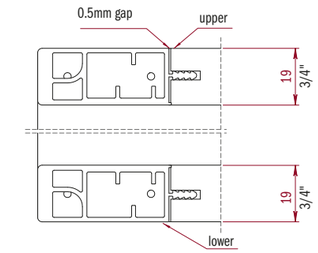

WALL UNIT PROCESSING SPECIFICATIONS

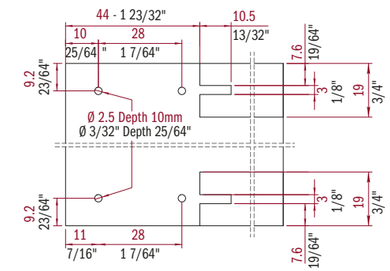

CF.2606SU02

PANNEL 18 mm

TECHNICAL SPECIFICATION 2606

∗ **ATTENTION:** the overlap must be facing inside the cabinet

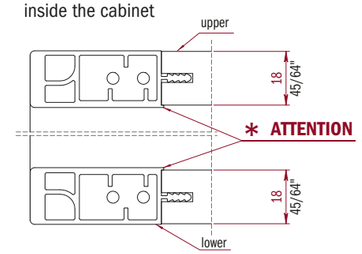

WALL UNIT PROCESSING SPECIFICATIONS

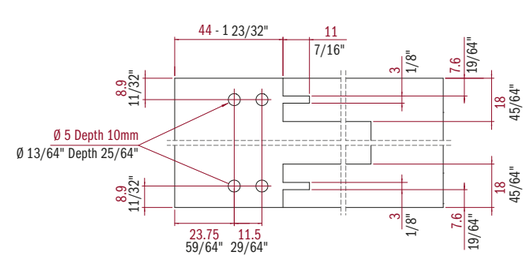

PANNEL 19 mm

ATTENTION: edged pannel.

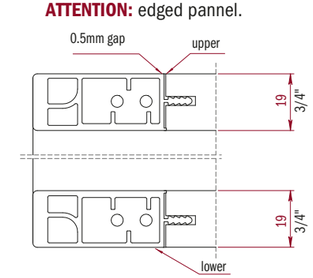

WALL UNIT PROCESSING SPECIFICATIONS

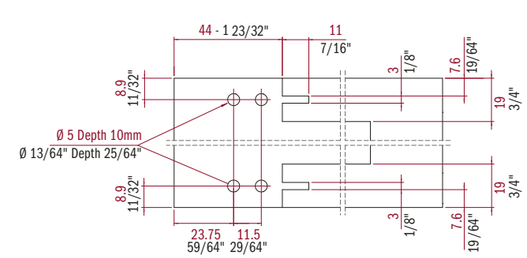

CF.0221SF

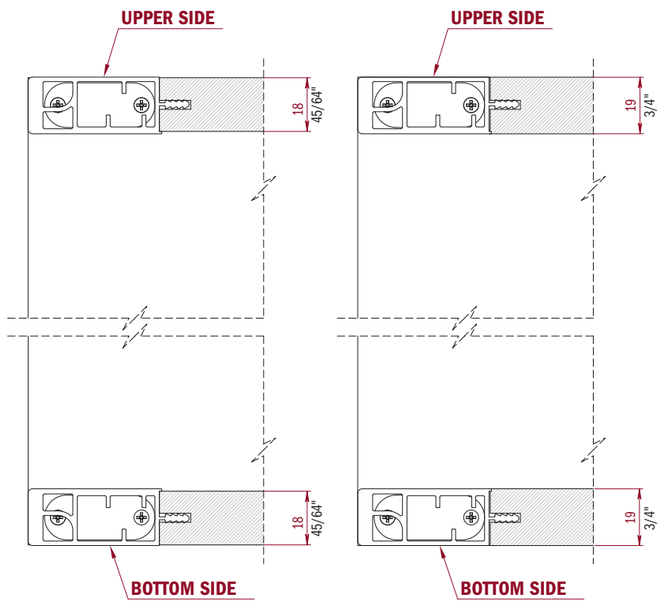

CF.2606SU02

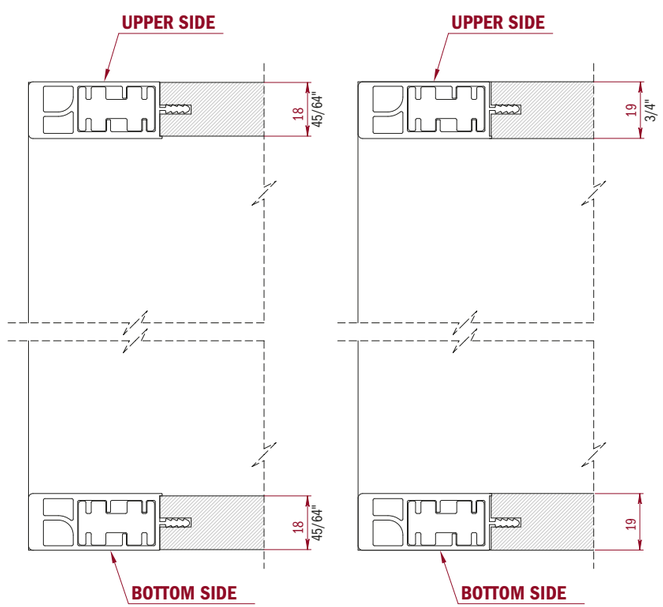

2586G (GASKET INCLUDED)

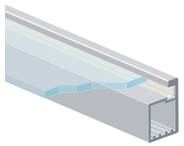

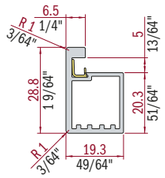

ALUMINIUM DOOR PROFILE
SUITABLE FOR SALICE AIR HINGES
OR SIMILAR ONLY
50S Aluminum Clear Anodize
S2I Aluminum Titanium Anodize
V12 Aluminum Black Matt Powder Coated
LU5 Aluminum Chrome Anodize
S2R Aluminum Copper Anodize
S2Q Aluminum Gold Anodize
Other Colors and Lengths Available FROM ITALY

PROFIL EN ALUMINIUM POUR PORTE
ADAPTÉ AUX CHARNIÈRES SALICE AIR
OU SIMILAIRE SEULEMENT
50S Aluminium Clair Anodisé
S2I Aluminium Titanium Anodize
V12 Aluminium Noir Mat Peint à Poudre
LU5 Aluminium Chrome Anodisé
S2R Aluminium Cuivre Anodisé
S2Q Aluminium Or Anodisé
Autres Couleurs et Longueurs Disponibles DE L'ITALIE

PERFIL EN ALUMINIO PARA PUERTAS
APTO PARA BISAGRAS AIR DE SALICE
O SIMILAR SOLO
50S Aluminio Anodizado Claro
S2I Aluminio Anodizado Titanio
V12 Aluminio Negro Mate Barnizado
LU5 Aluminio Anodizado Chrome
S2R Aluminio Anodizado Cobre
S2Q Aluminio Anodizado Oro
Otros Colores y Dimensiones Disponibles DE ITALIA

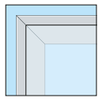

SEAL GASKET FOR 4 MM GLASS
2357AGV

COLORS	ITEM NUMBER	LENGTH mm	LENGTH inch	PCS PER BOX	BOX DIMENSION mm W x D x H	BOX DIMENSION inch W x D x H	BOX WEIGHT KG	BOX WEIGHT LB	STOCK IN AMERICA MSRP PRICING USD METER	FOOT	EACH	BOX
50S	U2586G50SL41	4100	161 7/16"	15	4250 x 200 x 80	167 3/8" x 7 7/8" x 3 1/8"	26.00	57.32	25.187	7.677	103.267	1549.001
S2I	U2586GS2IL41	4100	161 7/16"	15	4250 x 200 x 80	167 3/8" x 7 7/8" x 3 1/8"	26.00	57.32	28.383	8.651	116.370	1745.555
V12	U2586GV12L41	4100	161 7/16"	15	4250 x 200 x 80	167 3/8" x 7 7/8" x 3 1/8"	26.00	57.32	25.425	7.750	104.243	1563.638
									AVAILABLE FROM ITALY MSRP PRICING USD			
LU5	R2586GLU5L41	4100	161 7/16"		<<<<< MINIMUM ORDER AND PACKAGING TO BE CONFIRMED >>>>>				27.276	8.314	111.832	
S2R	R2586GS2RL41	4100	161 7/16"		<<<<< MINIMUM ORDER AND PACKAGING TO BE CONFIRMED >>>>>				22.456	6.845	92.070	
S2Q	R2586GS2QL41	4100	161 7/16"		<<<<< MINIMUM ORDER AND PACKAGING TO BE CONFIRMED >>>>>				23.014	7.015	94.357	

2587G (GASKET INCLUDED)

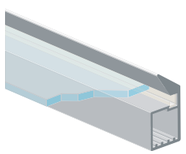

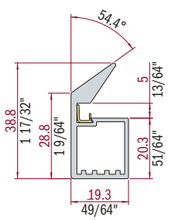

ALUMINIUM DOOR PROFILE
SUITABLE FOR SALICE AIR HINGES
OR SIMILAR ONLY
with built-in handle to
be matched with profile 2586G
50S Aluminum Clear Anodize
S2I Aluminum Titanium Anodize
V12 Aluminum Black Matt Powder Coated
LU5 Aluminum Chrome Anodize
S2R Aluminum Copper Anodize
S2Q Aluminum Gold Anodize
Other Colors and Lengths Available FROM ITALY

PROFIL EN ALUMINIUM POUR PORTE
ADAPTÉ AUX CHARNIÈRES SALICE AIR
OU SIMILAIRE SEULEMENT
avec poignée
intégré à être appariés avec profile 2586G
50S Aluminium Clair Anodisé
S2I Aluminium Titanium Anodize
V12 Aluminium Noir Mat Peint à Poudre
LU5 Aluminium Chrome Anodisé
S2R Aluminium Cuivre Anodisé
S2Q Aluminium Or Anodisé
Autres Couleurs et Longueurs Disponibles DE L'ITALIE

PERFIL EN ALUMINIO PARA PUERTAS
APTO PARA BISAGRAS AIR DE SALICE
O SIMILAR SOLO
con tirador integrado
para ser emparejado con el perfil 2586G
50S Aluminio Anodizado Claro
S2I Aluminio Anodizado Titanio
V12 Aluminio Negro Mate Barnizado
LU5 Aluminio Anodizado Chrome
S2R Aluminio Anodizado Cobre
S2Q Aluminio Anodizado Oro
Otros Colores y Dimensiones Disponibles DE ITALIA

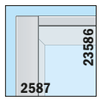

SEAL GASKET FOR 4 MM GLASS
2357AGV

COLORS	ITEM NUMBER	LENGTH mm	LENGTH inch	PCS PER BOX	BOX DIMENSION mm W x D x H	BOX DIMENSION inch W x D x H	BOX WEIGHT KG	BOX WEIGHT LB	STOCK IN AMERICA MSRP PRICING USD METER	FOOT	EACH	BOX
50S	U2587G50SL41	4100	161 7/16"	10	4250 x 190 x 90	167 3/8" x 7 1/2" x 3 1/2"	24.00	52.91	28.197	8.594	115.608	1156.077
S2I	U2587GS2IL41	4100	161 7/16"	10	4250 x 190 x 90	167 3/8" x 7 1/2" x 3 1/2"	24.00	52.91	32.096	9.783	131.594	1315.936
V12	U2587GV12L41	4100	161 7/16"	10	4250 x 190 x 90	167 3/8" x 7 1/2" x 3 1/2"	24.00	52.91	28.839	8.790	118.240	1182.399
									AVAILABLE FROM ITALY MSRP PRICING USD			
LU5	R2587GLU5L41	4100	161 7/16"		<<<<< MINIMUM ORDER AND PACKAGING TO BE CONFIRMED >>>>>				34.287	10.451	140.577	
S2R	R2587GS2RL41	4100	161 7/16"		<<<<< MINIMUM ORDER AND PACKAGING TO BE CONFIRMED >>>>>				28.405	8.658	116.461	
S2Q	R2587GS2QL41	4100	161 7/16"		<<<<< MINIMUM ORDER AND PACKAGING TO BE CONFIRMED >>>>>				29.068	8.860	119.179	

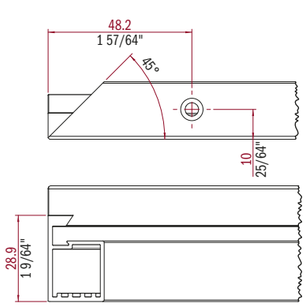

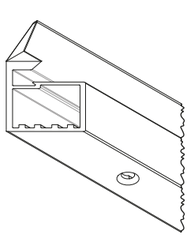

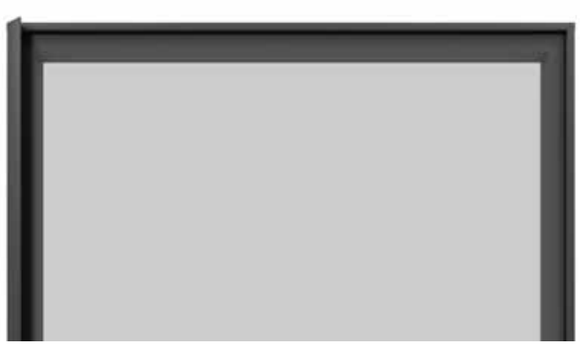

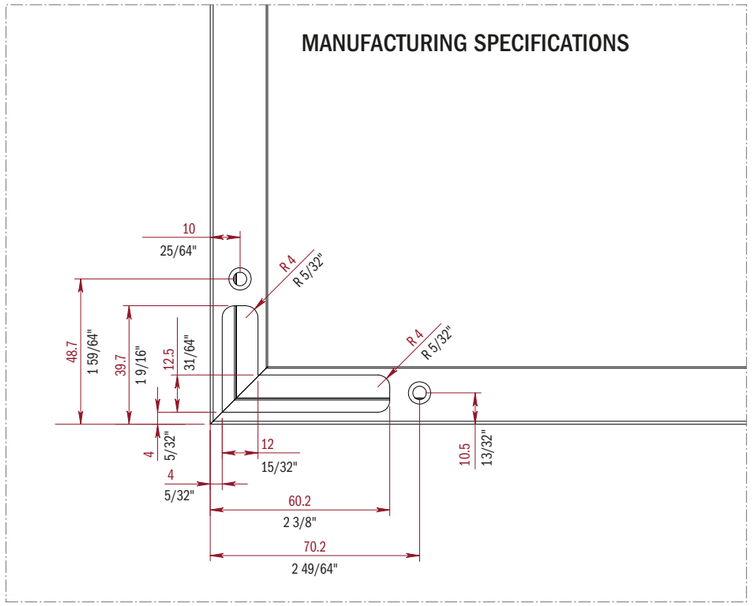

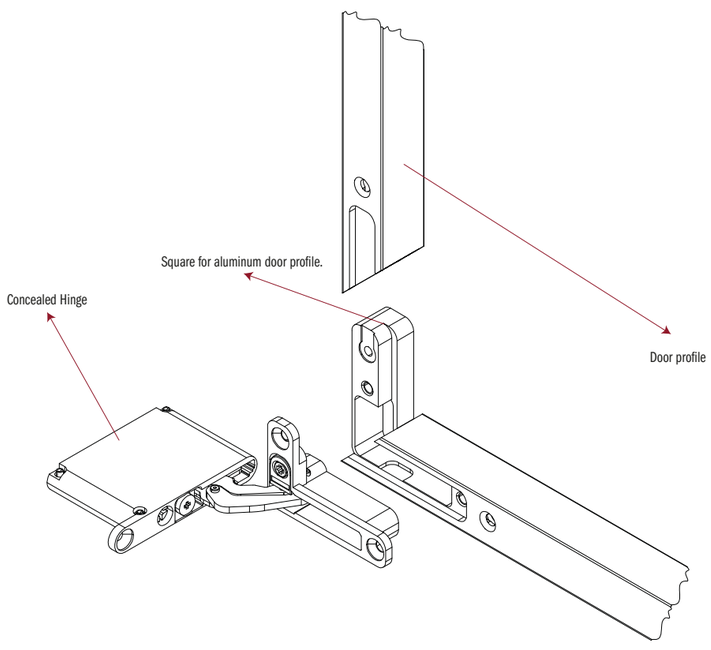

2558 (GASKET AND SCREWS INCLUDED)

ALUMINUM DOOR PROFILE
10 Pieces and 50 Screws per Box
50S Aluminum Clear Anodize
S2I Aluminum Titanium Anodize
V12 Aluminum Black Matt Powder Coated
Other Colors and Lengths Available FROM ITALY

PROFILÉ EN ALUMINIUM POUR PORTE
10 pièces et 50 vis par boîte
50S Aluminium Clair Anodisé
S2I Aluminium Titanium Anodize
V12 Aluminium Noir Mat Peint à Poudre
Autres Couleurs et Longueurs Disponibles DE L'ITALIE

PERFILES EN ALUMINIO PARA PUERTAS
10 piezas y 50 tornillos por confección
50S Aluminio Anodizado Claro
S2I Aluminio Anodizado Titanio
V12 Aluminio Negro Mate Barnizado
Otros Colores y Dimensiones Disponibles DE ITALIA

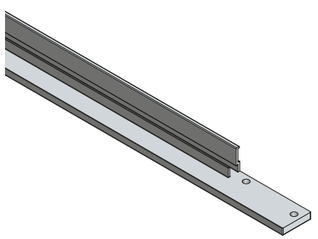

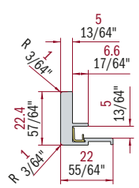

SEAL GASKET FOR 4 MM GLASS	SCREWS
2357AGV	VS39X18x

COLORS	ITEM NUMBER	LENGTH mm	LENGTH inch	PCS PER BOX	BOX DIMENSION mm W x D x H	BOX DIMENSION inch W x D x H	BOX WEIGHT KG	BOX WEIGHT LB	STOCK IN AMERICA MSRP PRICING USD EACH	STOCK IN AMERICA MSRP PRICING USD BOX
50S	U255850S.0068	377.8	14 7/8"	10	580 x 140 x 90	22 7/8" x 5 1/2" x 3 1/2"	2.00	4.41	81.197	811.970
50S	U255850S.0069	454.0	17 7/8"	10	660 x 140 x 90	26" x 5 1/2" x 3 1/2"	2.40	5.29	86.839	868.390
50S	U255850S.0070	530.2	20 7/8"	10	730 x 140 x 90	28 3/4" x 5 1/2" x 3 1/2"	2.70	5.95	87.742	877.420
50S	U255850S.0071	606.4	23 7/8"	10	800 x 140 x 90	31 1/2" x 5 1/2" x 3 1/2"	3.00	6.61	88.889	888.890
50S	U255850S.0072	758.8	29 7/8"	10	960 x 140 x 90	37 3/4" x 5 1/2" x 3 1/2"	3.60	7.94	100.087	1000.870
50S	U255850S.0073	911.2	35 7/8"	10	1110 x 140 x 90	43 3/4" x 5 1/2" x 3 1/2"	4.20	9.26	102.690	1026.900
50S	U255850S.0074	1063.6	41 7/8"	10	1260 x 140 x 90	49 5/8" x 5 1/2" x 3 1/2"	4.80	10.58	126.929	1269.290
S2I	U2558S2I.0068	377.8	14 7/8"	10	580 x 140 x 90	22 7/8" x 5 1/2" x 3 1/2"	2.00	4.41	85.787	857.870
S2I	U2558S2I.0069	454.0	17 7/8"	10	660 x 140 x 90	26" x 5 1/2" x 3 1/2"	2.40	5.29	95.220	952.200
S2I	U2558S2I.0070	530.2	20 7/8"	10	730 x 140 x 90	28 3/4" x 5 1/2" x 3 1/2"	2.70	5.95	94.711	947.110
S2I	U2558S2I.0071	606.4	23 7/8"	10	800 x 140 x 90	31 1/2" x 5 1/2" x 3 1/2"	3.00	6.61	95.858	958.580
S2I	U2558S2I.0072	758.8	29 7/8"	10	960 x 140 x 90	37 3/4" x 5 1/2" x 3 1/2"	3.60	7.94	109.129	1091.290
S2I	U2558S2I.0073	911.2	35 7/8"	10	1110 x 140 x 90	43 3/4" x 5 1/2" x 3 1/2"	4.20	9.26	110.282	1102.820
S2I	U2558S2I.0074	1063.6	41 7/8"	10	1260 x 140 x 90	49 5/8" x 5 1/2" x 3 1/2"	4.80	10.58	130.706	1307.060
V12	U2558V12.0068	377.8	14 7/8"	10	580 x 140 x 90	22 7/8" x 5 1/2" x 3 1/2"	2.00	4.41	83.000	830.000
V12	U2558V12.0069	454.0	17 7/8"	10	660 x 140 x 90	26" x 5 1/2" x 3 1/2"	2.40	5.29	89.691	896.910
V12	U2558V12.0070	530.2	20 7/8"	10	730 x 140 x 90	28 3/4" x 5 1/2" x 3 1/2"	2.70	5.95	89.641	896.410
V12	U2558V12.0071	606.4	23 7/8"	10	800 x 140 x 90	31 1/2" x 5 1/2" x 3 1/2"	3.00	6.61	90.787	907.870
V12	U2558V12.0072	758.8	29 7/8"	10	960 x 140 x 90	37 3/4" x 5 1/2" x 3 1/2"	3.60	7.94	105.172	1051.720
V12	U2558V12.0073	911.2	35 7/8"	10	1110 x 140 x 90	43 3/4" x 5 1/2" x 3 1/2"	4.20	9.26	105.172	1051.720
V12	U2558V12.0074	1063.6	41 7/8"	10	1260 x 140 x 90	49 5/8" x 5 1/2" x 3 1/2"	4.80	10.58	126.947	1269.470

2556G (GASKET INCLUDED)

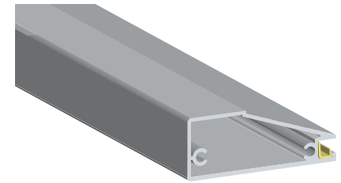

ALUMINUM DOOR PROFILE
50S Aluminum Clear Anodize
S2I Aluminum Titanium Anodize
V12 Aluminum Black Matt Powder Coated
LU5 Aluminum Chrome Anodize
S2R Aluminum Copper Anodize
S2Q Aluminum Gold Anodize
Other Colors and Lengths Available FROM ITALY

PROFILÉ EN ALUMINIUM POUR PORTE
50S Aluminium Clair Anodisé
S2I Aluminium Titanium Anodize
V12 Aluminium Noir Mat Peint à Poudre
LU5 Aluminium Chrome Anodisé
S2R Aluminium Cuivre Anodisé
S2Q Aluminium Or Anodisé
Autres Couleurs et Longueurs Disponibles DE L'ITALIE

PERFILES EN ALUMINIO PARA PUERTAS
50S Aluminio Anodizado Claro
S2I Aluminio Anodizado Titanio
V12 Aluminio Negro Mate Barnizado
LU5 Aluminio Anodizado Chrome
S2R Aluminio Anodizado Cobre
S2Q Aluminio Anodizado Oro
Otros Colores y Dimensiones Disponibles DE ITALIA

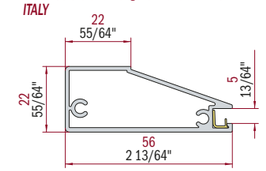

SEAL GASKET FOR 4 MM GLASS	JOINT PLATE	SCREWS
2357AGV	2000SQZ3	VAZB4X08TSP

COLORS	ITEM NUMBER	LENGTH mm	LENGTH inch	PCS PER BOX	BOX DIMENSION mm W x D x H	BOX DIMENSION inch W x D x H	BOX WEIGHT KG	BOX WEIGHT LB	STOCK IN AMERICA MSRP PRICING USD METER	STOCK IN AMERICA MSRP PRICING USD FOOT	STOCK IN AMERICA MSRP PRICING USD EACH	STOCK IN AMERICA MSRP PRICING USD BOX
50S	U2556G50SL27	2670	105 1/8"	10	2740 x 125 x 95	107 7/8" x 4 7/8" x 3 3/4"	18.00	39.68	31.734	9.673	84.730	847.298
50S	U2556G50SL41	4100	161 7/16"	10	4250 x 125 x 95	167 3/8" x 4 7/8" x 3 3/4"	27.00	59.52	30.363	9.255	124.488	1244.883
S2I	U2556GS2IL27	2670	105 1/8"	10	2740 x 125 x 95	107 7/8" x 4 7/8" x 3 3/4"	18.00	39.68	34.347	10.469	91.706	917.065
S2I	U2556GS2IL41	4100	161 7/16"	10	4250 x 125 x 95	167 3/8" x 4 7/8" x 3 3/4"	27.00	59.52	33.597	10.240	137.748	1377.477
V12	U2556GV12L27	2670	105 1/8"	10	2740 x 125 x 95	107 7/8" x 4 7/8" x 3 3/4"	18.00	39.68	31.019	9.455	82.821	828.207
V12	U2556GV12L41	4100	161 7/16"	10	4250 x 125 x 95	167 3/8" x 4 7/8" x 3 3/4"	27.00	59.52	28.752	8.764	117.883	1178.832
									AVAILABLE FROM ITALY MSRP PRICING USD			
LU5	R2556GLU5L41	4100	161 7/16"		<<<<< MINIMUM ORDER AND PACKAGING TO BE CONFIRMED >>>>>				38.264	11.663	156.882	
S2R	R2556GS2RL41	4100	161 7/16"		<<<<< MINIMUM ORDER AND PACKAGING TO BE CONFIRMED >>>>>				42.693	13.013	175.041	
S2Q	R2556GS2QL41	4100	161 7/16"		<<<<< MINIMUM ORDER AND PACKAGING TO BE CONFIRMED >>>>>				44.085	13.437	180.749	

2557 (SCREWS INCLUDED)

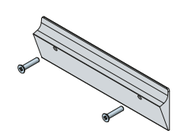

ALUMINUM DOOR HANDLE
50S Aluminum Clear Anodize
S2I Aluminum Titanium Anodize
V12 Aluminum Black Matt Powder Coated
LU5 Aluminum Chrome Anodize
S2R Aluminum Copper Anodize
S2Q Aluminum Gold Anodize
Other Colors and Lengths Available FROM ITALY

POIGNÉE POUR PORTE EN ALUMINIUM
50S Aluminium Clair Anodisé
S2I Aluminium Titanium Anodize
V12 Aluminium Noir Mat Peint à Poudre
LU5 Aluminium Chrome Anodisé
S2R Aluminium Cuivre Anodisé
S2Q Aluminium Or Anodisé
Autres Couleurs et Longueurs Disponibles DE L'ITALIE

TIRADOR EN ALUMINIO PARA PUERTAS
50S Aluminio Anodizado Claro
S2I Aluminio Anodizado Titanio
V12 Aluminio Negro Mate Barnizado
LU5 Aluminio Anodizado Chrome
S2R Aluminio Anodizado Cobre
S2Q Aluminio Anodizado Oro
Otros Colores y Dimensiones Disponibles DE ITALIA

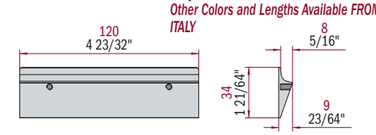

COLORS	ITEM NUMBER	LENGTH mm	LENGTH inch	PCS PER BOX	BOX DIMENSION mm W x D x H	BOX DIMENSION inch W x D x H	BOX WEIGHT KG	BOX WEIGHT LB	STOCK IN AMERICA MSRP PRICING USD EACH	STOCK IN AMERICA MSRP PRICING USD BOX
50S	U255750S.002	120	4 3/4"	10	280 x 60 x 58	11" x 2 3/8" x 2 1/4"	0.80	1.76	28.065	280.650
S2I	U2557S2I.002	120	4 3/4"	10	280 x 60 x 58	11" x 2 3/8" x 2 1/4"	0.80	1.76	30.623	306.230
V12	U2557V12.002	120	4 3/4"	10	280 x 60 x 58	11" x 2 3/8" x 2 1/4"	0.80	1.76	28.238	282.380
									AVAILABLE FROM ITALY MSRP PRICING USD	
LU5	2557LU5.0002	120	4 3/4"		<<<<< MINIMUM ORDER AND PACKAGING TO BE CONFIRMED >>>>>				27.212	
S2R	2557S2R.0002	120	4 3/4"		<<<<< MINIMUM ORDER AND PACKAGING TO BE CONFIRMED >>>>>				38.077	
S2Q	2557S2Q.0002	120	4 3/4"		<<<<< MINIMUM ORDER AND PACKAGING TO BE CONFIRMED >>>>>				36.464	

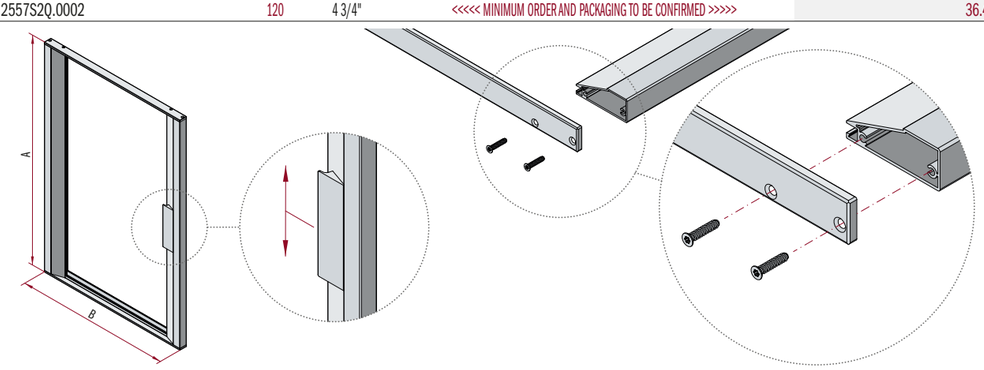

2556G (GASKET INCLUDED)

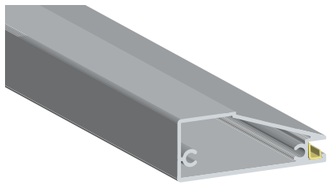

ALUMINUM DOOR PROFILE
50S Aluminum Clear Anodize
S2I Aluminum Titanium Anodize
V12 Aluminum Black Matt Powder Coated
LU5 Aluminum Chrome Anodize
S2R Aluminum Copper Anodize
S2Q Aluminum Gold Anodize
Other Colors and Lengths Available FROM ITALY

PROFILÉ EN ALUMINIUM POUR PORTE
50S Aluminium Clair Anodisé
S2I Aluminium Titanium Anodize
V12 Aluminium Noir Mat Peint à Poudre
LU5 Aluminium Chrome Anodisé
S2R Aluminium Cuivre Anodisé
S2Q Aluminium Or Anodisé
Autres Couleurs et Longueurs Disponibles DE L'ITALIE

PERFILES EN ALUMINIO PARA PUERTAS
50S Aluminio Anodizado Claro
S2I Aluminio Anodizado Titanio
V12 Aluminio Negro Mate Barnizado
LU5 Aluminio Anodizado Chrome
S2R Aluminio Anodizado Cobre
S2Q Aluminio Anodizado Oro
Otros Colores y Dimensiones Disponibles DE ITALIA

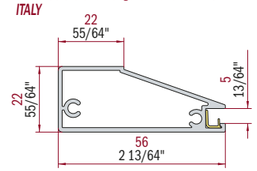

SEAL GASKET FOR 4 MM GLASS	JOINT PLATE	SCREWS
2357AGV	2000SQZ3	VAZB4X08TSP

COLORS	ITEM NUMBER	LENGTH mm	LENGTH inch	PCS PER BOX	BOX DIMENSION mm W x D x H	BOX DIMENSION inch W x D x H	BOX WEIGHT KG	BOX WEIGHT LB	STOCK IN AMERICA MSRP PRICING USD METER	FOOT	EACH	BOX
50S	U2556G50SL27	2670	105 1/8"	10	2740 x 125 x 95	107 7/8" x 4 7/8" x 3 3/4"	18.00	39.68	31.734	9.673	84.730	847.298
50S	U2556G50SL41	4100	161 7/16"	10	4250 x 125 x 95	167 3/8" x 4 7/8" x 3 3/4"	27.00	59.52	30.363	9.255	124.488	1244.883
S2I	U2556GS2IL27	2670	105 1/8"	10	2740 x 125 x 95	107 7/8" x 4 7/8" x 3 3/4"	18.00	39.68	34.347	10.469	91.706	917.065
S2I	U2556GS2IL41	4100	161 7/16"	10	4250 x 125 x 95	167 3/8" x 4 7/8" x 3 3/4"	27.00	59.52	33.597	10.240	137.748	1377.477
V12	U2556GV12L27	2670	105 1/8"	10	2740 x 125 x 95	107 7/8" x 4 7/8" x 3 3/4"	18.00	39.68	31.019	9.455	82.821	828.207
V12	U2556GV12L41	4100	161 7/16"	10	4250 x 125 x 95	167 3/8" x 4 7/8" x 3 3/4"	27.00	59.52	28.752	8.764	117.883	1178.832
									AVAILABLE FROM ITALY MSRP PRICING USD			
LU5	R2556GLU5L41	4100	161 7/16"		<<<<< MINIMUM ORDER AND PACKAGING TO BE CONFIRMED >>>>>				38.264	11.663	156.882	
S2R	R2556GS2RL41	4100	161 7/16"		<<<<< MINIMUM ORDER AND PACKAGING TO BE CONFIRMED >>>>>				42.693	13.013	175.041	
S2Q	R2556GS2QL41	4100	161 7/16"		<<<<< MINIMUM ORDER AND PACKAGING TO BE CONFIRMED >>>>>				44.085	13.437	180.749	

2557 (SCREWS INCLUDED)

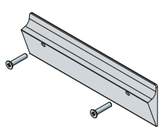

ALUMINUM DOOR HANDLE
50S Aluminum Clear Anodize
S2I Aluminum Titanium Anodize
V12 Aluminum Black Matt Powder Coated
LU5 Aluminum Chrome Anodize
S2R Aluminum Copper Anodize
S2Q Aluminum Gold Anodize
Other Colors and Lengths Available FROM ITALY

POIGNÉE POUR PORTE EN ALUMINIUM
50S Aluminium Clair Anodisé
S2I Aluminium Titanium Anodize
V12 Aluminium Noir Mat Peint à Poudre
LU5 Aluminium Chrome Anodisé
S2R Aluminium Cuivre Anodisé
S2Q Aluminium Or Anodisé
Autres Couleurs et Longueurs Disponibles DE L'ITALIE

TIRADOR EN ALUMINIO PARA PUERTAS
50S Aluminio Anodizado Claro
S2I Aluminio Anodizado Titanio
V12 Aluminio Negro Mate Barnizado
LU5 Aluminio Anodizado Chrome
S2R Aluminio Anodizado Cobre
S2Q Aluminio Anodizado Oro
Otros Colores y Dimensiones Disponibles DE ITALIA

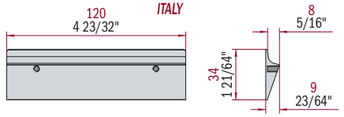

COLORS	ITEM NUMBER	LENGTH mm	LENGTH inch	PCS PER BOX	BOX DIMENSION mm W x D x H	BOX DIMENSION inch W x D x H	BOX WEIGHT KG	BOX WEIGHT LB	STOCK IN AMERICA MSRP PRICING USD EACH	BOX
50S	U255750S.002	120	4 3/4"	10	280 x 60 x 58	11" x 2 3/8" x 2 1/4"	0.80	1.76	28.065	280.650
S2I	U2557S2I.002	120	4 3/4"	10	280 x 60 x 58	11" x 2 3/8" x 2 1/4"	0.80	1.76	30.623	306.230
V12	U2557V12.002	120	4 3/4"	10	280 x 60 x 58	11" x 2 3/8" x 2 1/4"	0.80	1.76	28.238	282.380
									AVAILABLE FROM ITALY MSRP PRICING USD	
LU5	2557LU5.0002	120	4 3/4"		<<<<< MINIMUM ORDER AND PACKAGING TO BE CONFIRMED >>>>>				27.212	
S2R	2557S2R.0002	120	4 3/4"		<<<<< MINIMUM ORDER AND PACKAGING TO BE CONFIRMED >>>>>				38.077	
S2Q	2557S2Q.0002	120	4 3/4"		<<<<< MINIMUM ORDER AND PACKAGING TO BE CONFIRMED >>>>>				36.464	

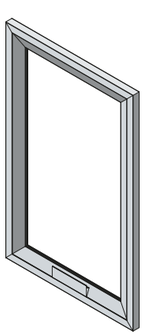

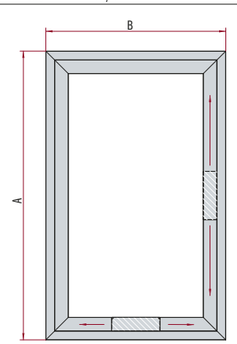

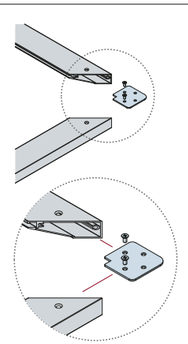

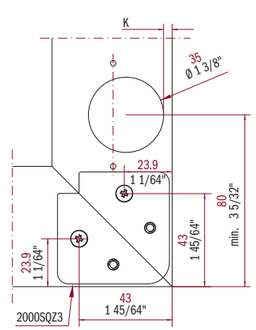

2446

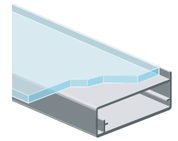

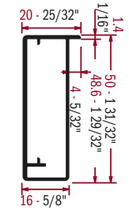

ALUMINUM DOOR PROFILE
50S Aluminum Clear Anodize
S2I Aluminum Titanium Anodize
SB1 Aluminum Stainless Anodize
Other Colors and Lengths Available FROM ITALY

PROFILÉ EN ALUMINIUM POUR PORTE
50S Aluminium Clair Anodisé
S2I Aluminium Titanium Anodize
SB1 Aluminium Inox Anodisé
Autres Couleurs et Longueurs Disponibles DE L'ITALIE

PERFILES EN ALUMINIO PARA PUERTAS
50S Aluminio Anodizado Claro
S2I Aluminio Anodizado Titanio
SB1 Aluminio Inox Anodizado
Otros Colores y Dimensiones Disponibles DE ITALIA

Profile for glued glass
Profil de verre collé
Perfil para vidrio pegado

JOINT PLATE	SCREWS
2000SQZ3	VAZB4X08TSP

COLORS	ITEM NUMBER	LENGTH mm	LENGTH inch	PCS PER BOX	BOX DIMENSION mm W x D x H	BOX DIMENSION inch W x D x H	BOX WEIGHT KG	BOX WEIGHT LB	STOCK IN AMERICA MSRP PRICING USD METER	FOOT	EACH	BOX
50S	U244650SL41	4100	161 7/16"	10	4250 x 125 x 95	167 3/8" x 4 7/8" x 3 3/4"	21.50	47.40	24.300	7.407	99.630	996.300
S2I	U2446S2IL41	4100	161 7/16"	10	4250 x 125 x 95	167 3/8" x 4 7/8" x 3 3/4"	21.50	47.40	30.872	9.410	126.575	1265.752
SB1	U2446SB1L27	2670	105 1/8"	10	2740 x 125 x 95	107 7/8" x 4 7/8" x 3 3/4"	14.00	30.86	36.094	11.001	96.371	963.710
SB1	U2446SB1L41	4100	161 7/16"	10	4250 x 125 x 95	167 3/8" x 4 7/8" x 3 3/4"	21.50	47.40	35.190	10.726	144.279	1442.790

2591

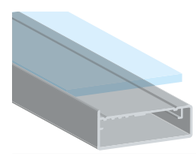

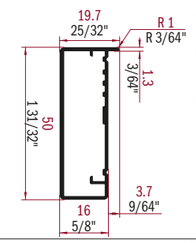

ALUMINUM DOOR PROFILE
50S Aluminum Clear Anodize
S2I Aluminum Titanium Anodize
SB1 Aluminum Stainless Anodize
V12 Aluminum Black Matt Powder Coated
LU5 Aluminum Chrome Anodize
S2R Aluminum Copper Anodize
S2Q Aluminum Gold Anodize
Other Colors and Lengths Available FROM ITALY

PROFILÉ EN ALUMINIUM POUR PORTE
50S Aluminium Clair Anodisé
S2I Aluminium Titanium Anodize
SB1 Aluminium Inox Anodisé
V12 Aluminium Noir Mat Peint à Poudre
LU5 Aluminium Chrome Anodisé
S2R Aluminium Cuivre Anodisé
S2Q Aluminium Or Anodisé
Autres Couleurs et Longueurs Disponibles DE L'ITALIE

PERFILES EN ALUMINIO PARA PUERTAS
50S Aluminio Anodizado Claro
S2I Aluminio Anodizado Titanio
SB1 Aluminio Inox Anodizado
V12 Aluminio Negro Mate Barnizado
LU5 Aluminio Anodizado Chrome
S2R Aluminio Anodizado Cobre
S2Q Aluminio Anodizado Oro
Otros Colores y Dimensiones Disponibles DE ITALIA

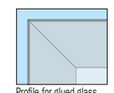

Profile for glued glass
Profil de verre collé
Perfil para vidrio pegado

JOINT PLATE	SCREWS
2000SQZ3	VAxx4x08TSP

COLORS	ITEM NUMBER	LENGTH mm	LENGTH inch	PCS PER BOX	BOX DIMENSION mm W x D x H	BOX DIMENSION inch W x D x H	BOX WEIGHT KG	BOX WEIGHT LB	STOCK IN AMERICA MSRP PRICING USD METER	FOOT	EACH	BOX
50S	U259150SL27	2670	105 1/8"	10	2740 x 125 x 95	107 7/8" x 4 7/8" x 3 3/4"	14.00	30.86	24.975	7.612	66.683	666.833
50S	U259150SL41	4100	161 7/16"	10	4250 x 125 x 95	167 3/8" x 4 7/8" x 3 3/4"	21.50	47.40	24.300	7.407	99.630	996.300
S2I	U2591S2IL27	2670	105 1/8"	10	2740 x 125 x 95	107 7/8" x 4 7/8" x 3 3/4"	14.00	30.86	32.113	9.788	85.742	857.417
S2I	U2591S2IL41	4100	161 7/16"	10	4250 x 125 x 95	167 3/8" x 4 7/8" x 3 3/4"	21.50	47.40	30.872	9.410	126.575	1265.752
SB1	U2591SB1L27	2670	105 1/8"	10	2740 x 125 x 95	107 7/8" x 4 7/8" x 3 3/4"	14.00	30.86	36.094	11.001	96.371	963.710
SB1	U2591SB1L41	4100	161 7/16"	10	4250 x 125 x 95	167 3/8" x 4 7/8" x 3 3/4"	21.50	47.40	35.190	10.726	144.279	1442.790
V12	U2591V12L27	2670	105 1/8"	10	2740 x 125 x 95	107 7/8" x 4 7/8" x 3 3/4"	14.00	30.86	25.121	7.657	67.073	670.731
V12	U2591V12L41	4100	161 7/16"	10	4250 x 125 x 95	167 3/8" x 4 7/8" x 3 3/4"	21.50	47.40	24.454	7.454	100.261	1002.614
									AVAILABLE FROM ITALY MSRP PRICING USD			
LU5	R2591LU5L41	4100	161 7/16"		<<<<< MINIMUM ORDER AND PACKAGING TO BE CONFIRMED >>>>>				28.159	8.583	115.452	
S2R	R2591S2RL41	4100	161 7/16"		<<<<< MINIMUM ORDER AND PACKAGING TO BE CONFIRMED >>>>>				25.467	7.762	104.415	
S2Q	R2591S2QL41	4100	161 7/16"		<<<<< MINIMUM ORDER AND PACKAGING TO BE CONFIRMED >>>>>				26.882	8.194	110.216	

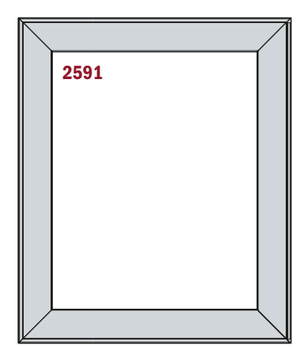

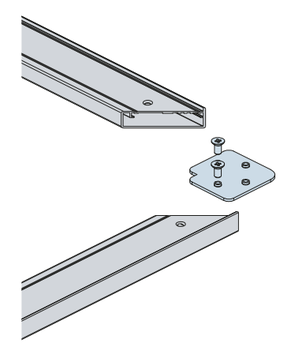

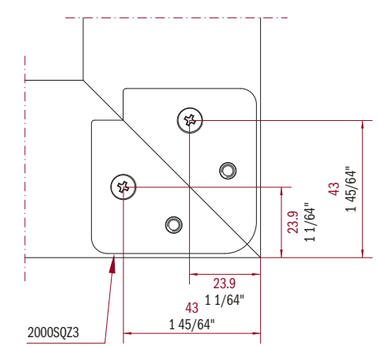

2364AG (GASKET INCLUDED)

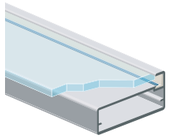

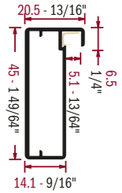

ALUMINUM DOOR PROFILE
50S Aluminum Clear Anodize
S2I Aluminum Titanium Anodize
SB1 Aluminum Stainless Anodize
V12 Aluminum Black Matt Powder Coated
LU5 Aluminum Chrome Anodize
S2R Aluminum Copper Anodize
S2Q Aluminum Gold Anodize
Other Colors and Lengths Available FROM ITALY

PROFILÉ EN ALUMINIUM POUR PORTE
50S Aluminium Clair Anodisé
S2I Aluminium Titanium Anodize
SB1 Aluminium Inox Anodisé
V12 Aluminium Noir Mat Peint à Poudre
LU5 Aluminium Chrome Anodisé
S2R Aluminium Cuivre Anodisé
S2Q Aluminium Or Anodisé
Autres Couleurs et Longueurs Disponibles DE L'ITALIE

PERFILES EN ALUMINIO PARA PUERTAS
50S Aluminio Anodizado Claro
S2I Aluminio Anodizado Titanio
SB1 Aluminio Inox Anodizado
V12 Aluminio Negro Mate Barnizado
LU5 Aluminio Anodizado Chrome
S2R Aluminio Anodizado Cobre
S2Q Aluminio Anodizado Oro
Otros Colores y Dimensiones Disponibles DE ITALIA

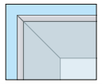

SEAL GASKET FOR 4 MM GLASS	JOINT PLATE	SCREWS
2357AGV	2000SQZ3	VAZB4X08TSP

COLORS	ITEM NUMBER	LENGTH mm	LENGTH inch	PCS PER BOX	BOX DIMENSION mm W x D x H	BOX DIMENSION inch W x D x H	BOX WEIGHT KG	BOX WEIGHT LB	STOCK IN AMERICA MSRP PRICING USD METER	FOOT	EACH	BOX
50S	U2364AG50SL27	2670	105 1/8"	10	2740 x 125 x 95	107 7/8" x 4 7/8" x 3 3/4"	13.00	28.66	22.168	6.757	59.189	591.886
50S	U2364AG50SL41	4100	161 7/16"	10	4250 x 125 x 95	167 3/8" x 4 7/8" x 3 3/4"	20.00	44.09	19.582	5.969	80.286	802.862
S2I	U2364AGS2IL27	2670	105 1/8"	10	2740 x 125 x 95	107 7/8" x 4 7/8" x 3 3/4"	13.00	28.66	32.691	9.964	87.285	872.850
S2I	U2364AGS2IL41	4100	161 7/16"	10	4250 x 125 x 95	167 3/8" x 4 7/8" x 3 3/4"	20.00	44.09	30.534	9.307	125.189	1251.894
SB1	U2364AGSB1L27	2670	105 1/8"	10	2740 x 125 x 95	107 7/8" x 4 7/8" x 3 3/4"	13.00	28.66	37.486	11.426	100.088	1000.876
SB1	U2364AGSB1L41	4100	161 7/16"	10	4250 x 125 x 95	167 3/8" x 4 7/8" x 3 3/4"	20.00	44.09	35.191	10.726	144.283	1442.831
V12	U2364AGV12L27	2670	105 1/8"	10	2740 x 125 x 95	107 7/8" x 4 7/8" x 3 3/4"	13.00	28.66	25.747	7.848	68.744	687.445
V12	U2364AGV12L41	4100	161 7/16"	10	4250 x 125 x 95	167 3/8" x 4 7/8" x 3 3/4"	20.00	44.09	23.362	7.121	95.784	957.842
									AVAILABLE FROM ITALY MSRP PRICING USD			
LU5	R2364AGLU5L41	4100	161 7/16"		<<<<< MINIMUM ORDER AND PACKAGING TO BE CONFIRMED >>>>>				30.303	9.236	124.242	
S2R	R2364AGS2RL41	4100	161 7/16"		<<<<< MINIMUM ORDER AND PACKAGING TO BE CONFIRMED >>>>>				31.620	9.638	129.642	
S2Q	R2364AGS2QL41	4100	161 7/16"		<<<<< MINIMUM ORDER AND PACKAGING TO BE CONFIRMED >>>>>				31.979	9.747	131.114	

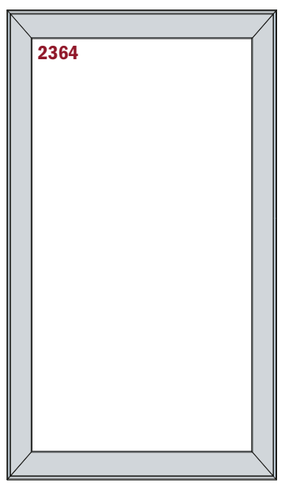

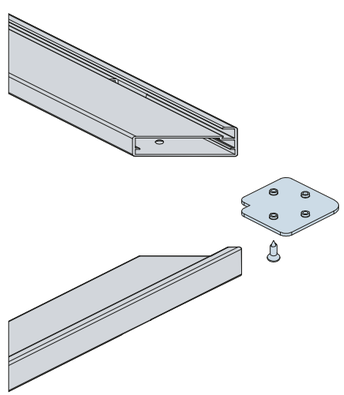

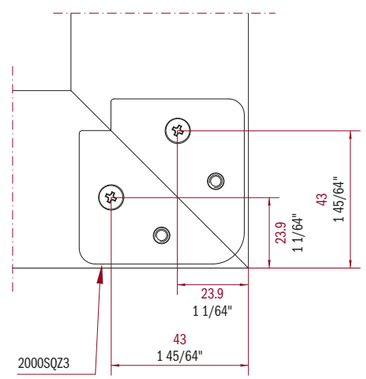

2505G (GASKET INCLUDED)

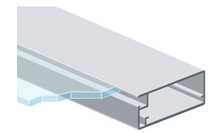

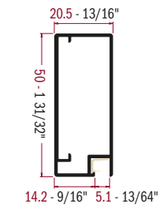

ALUMINUM DOOR PROFILE
50S Aluminum Clear Anodize
S2I Aluminum Titanium Anodize
SB1 Aluminum Stainless Anodize
V12 Aluminum Black Matt Powder Coated
LU5 Aluminum Chrome Anodize
S2R Aluminum Copper Anodize
S2Q Aluminum Gold Anodize
Other Colors and Lengths Available FROM ITALY

PROFILÉ EN ALUMINIUM POUR PORTE
50S Aluminium Clair Anodisé
S2I Aluminium Titanium Anodize
SB1 Aluminium Inox Anodisé
V12 Aluminium Noir Mat Peint à Poudre
LU5 Aluminium Chrome Anodisé
S2R Aluminium Cuivre Anodisé
S2Q Aluminium Or Anodisé
Autres Couleurs et Longueurs Disponibles DE L'ITALIE

PERFILES EN ALUMINIO PARA PUERTAS
50S Aluminio Anodizado Claro
S2I Aluminio Anodizado Titanio
SB1 Aluminio Inox Anodizado
V12 Aluminio Negro Mate Barnizado
LU5 Aluminio Anodizado Chrome
S2R Aluminio Anodizado Cobre
S2Q Aluminio Anodizado Oro
Otros Colores y Dimensiones Disponibles DE ITALIA

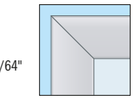

SEAL GASKET FOR 4 MM GLASS	JOINT PLATE	SCREWS
2357AGV	2000SQZ3	VAZB4X08TSP

COLORS	ITEM NUMBER	LENGTH mm	LENGTH inch	PCS PER BOX	BOX DIMENSION mm W x D x H	BOX DIMENSION inch W x D x H	BOX WEIGHT KG	BOX WEIGHT LB	STOCK IN AMERICA MSRP PRICING USD METER	FOOT	EACH	BOX
50S	U2505G50SL27	2670	105 1/8"	10	2740 x 170 x 90	107 7/8" x 6 3/4" x 3 1/2"	14.50	31.97	23.688	7.220	63.247	632.470
50S	U2505G50SL41	4100	161 7/16"	10	4250 x 170 x 90	167 3/8" x 6 3/4" x 3 1/2"	22.00	48.50	23.079	7.034	94.624	946.239
S2I	U2505GS2IL27	2670	105 1/8"	10	2740 x 170 x 90	107 7/8" x 6 3/4" x 3 1/2"	14.50	31.97	29.746	9.067	79.422	794.218
S2I	U2505GS2IL41	4100	161 7/16"	10	4250 x 170 x 90	167 3/8" x 6 3/4" x 3 1/2"	22.00	48.50	29.450	8.976	120.745	1207.450
SB1	U2505GSB1L27	2670	105 1/8"	10	2740 x 170 x 90	107 7/8" x 6 3/4" x 3 1/2"	14.50	31.97	40.526	12.352	108.204	1082.044
SB1	U2505GSB1L41	4100	161 7/16"	10	4250 x 170 x 90	167 3/8" x 6 3/4" x 3 1/2"	22.00	48.50	39.041	11.900	160.068	1600.681
V12	U2505GV12L27	2670	105 1/8"	10	2740 x 170 x 90	107 7/8" x 6 3/4" x 3 1/2"	14.50	31.97	26.017	7.930	69.465	694.654
V12	U2505GV12L41	4100	161 7/16"	10	4250 x 170 x 90	167 3/8" x 6 3/4" x 3 1/2"	22.00	48.50	23.910	7.288	98.031	980.310
									AVAILABLE FROM ITALY MSRP PRICING USD			
LU5	R2505GLU5L41	4100	161 7/16"		<<<<< MINIMUM ORDER AND PACKAGING TO BE CONFIRMED >>>>>				32.411	9.879	132.885	
S2R	R2505GS2RL41	4100	161 7/16"		<<<<< MINIMUM ORDER AND PACKAGING TO BE CONFIRMED >>>>>				28.256	8.612	115.850	
S2Q	R2505GS2QL41	4100	161 7/16"		<<<<< MINIMUM ORDER AND PACKAGING TO BE CONFIRMED >>>>>				29.173	8.892	119.609	

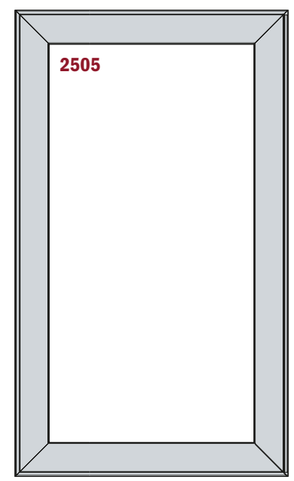

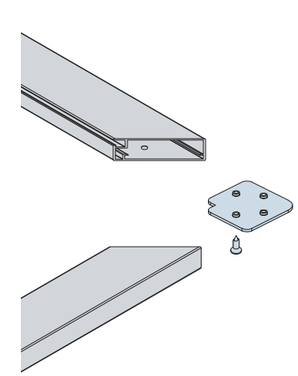

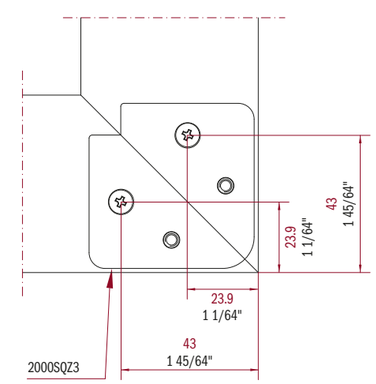

2357AG (GASKET INCLUDED)

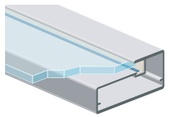

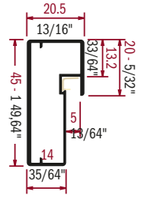

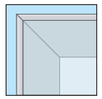

ALUMINUM DOOR PROFILE
50S Aluminum Clear Anodize
LU5 Aluminum Chrome Anodize
S2R Aluminum Copper Anodize
S2Q Aluminum Gold Anodize
Colors and Lengths Available FROM ITALY

PROFILÉ EN ALUMINIUM POUR PORTE
50S Aluminium Clair Anodisé
LU5 Aluminium Chrome Anodisé
S2R Aluminium Cuivre Anodisé
S2Q Aluminium Or Anodisé
Couleurs et Longueurs Disponibles DE L'ITALIE

PERFILES EN ALUMINIO PARA PUERTAS
50S Aluminio Anodizado Claro
LU5 Aluminio Anodizado Chrome
S2R Aluminio Anodizado Cobre
S2Q Aluminio Anodizado Oro
Colores y Dimensiones DE ITALIA

SEAL GASKET FOR 4 MM GLASS	JOINT PLATE	SCREWS
2357AGV	2000SQZ3	VAZB4X08TSP

COLORS	ITEM NUMBER	LENGTH mm	LENGTH inch	PCS PER BOX	BOX DIMENSION mm W x D x H	BOX DIMENSION inch W x D x H	BOX WEIGHT KG	BOX WEIGHT LB	STOCK IN AMERICA MSRP PRICING USD METER	FOOT	EACH	BOX
50S	U2357AG50SL39	3900	153 9/16"	10	4250 x 125 x 95	167 3/8" x 4 7/8" x 3 3/4"	22.00	48.50	21.257	6.479	82.902	829.023
									AVAILABLE FROM ITALY MSRP PRICING USD			
LU5	R2357AGLU5L39	3900	153 9/16"		<<<<< MINIMUM ORDER AND PACKAGING TO BE CONFIRMED >>>>>				31.299	9.540	122.066	
S2R	R2357AGS2RL39	3900	153 9/16"		<<<<< MINIMUM ORDER AND PACKAGING TO BE CONFIRMED >>>>>				30.919	9.424	120.584	
S2Q	R2357AGS2QL39	3900	153 9/16"		<<<<< MINIMUM ORDER AND PACKAGING TO BE CONFIRMED >>>>>				32.654	9.953	127.351	

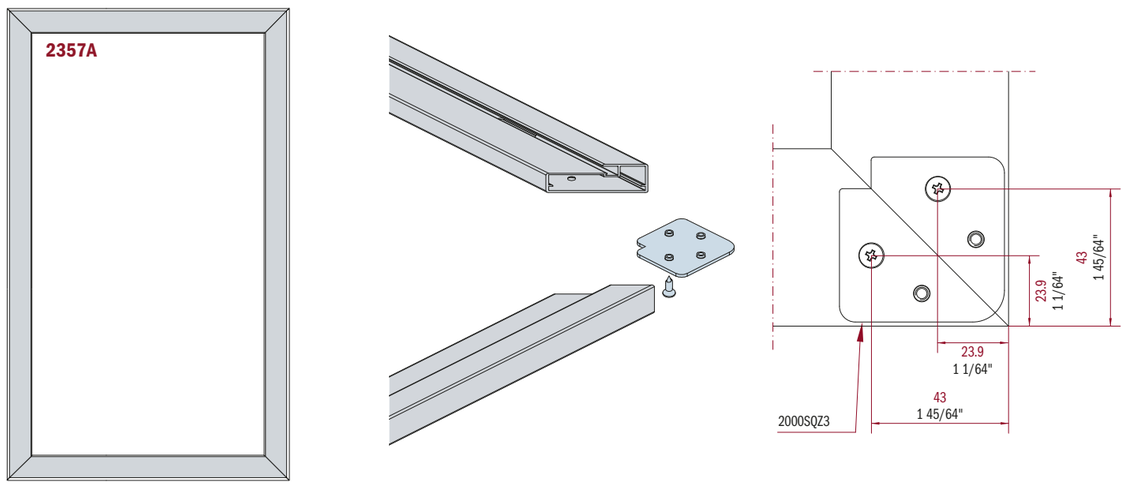

2441G (GASKET INCLUDED)

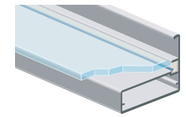

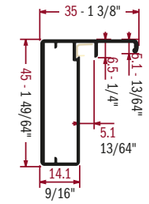

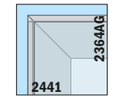

ALUMINUM DOOR PROFILE
Aluminum door profile with built-in handle to be matched with profile 2364AG
50S Aluminum Clear Anodize
LU5 Aluminum Chrome Anodize
S2R Aluminum Copper Anodize
S2Q Aluminum Gold Anodize
Colors and Lengths Available FROM ITALY

PROFILÉ EN ALUMINIUM POUR PORTE
Profilé en aluminium pour porte avec poignée intégré à être appariés avec profile 2364AG
50S Aluminium Clair Anodisé
LU5 Aluminium Chrome Anodisé
S2R Aluminium Cuivre Anodisé
S2Q Aluminium Or Anodisé
Couleurs et Longueurs Disponibles DE L'ITALIE

PERFILES EN ALUMINIO PARA PUERTAS
Perfil en aluminio para puerta con tirador integrado para ser emparejado con el perfil 2364AG
50S Aluminio Anodizado Claro
LU5 Aluminio Anodizado Chrome
S2R Aluminio Anodizado Cobre
S2Q Aluminio Anodizado Oro
Colores y Dimensiones DE ITALIA

SEAL GASKET FOR 4 MM GLASS	JOINT PLATE	SCREWS
2357AGV	2000SQZ3	VAZB4X08TSP

COLORS	ITEM NUMBER	LENGTH mm	LENGTH inch	PCS PER BOX	BOX DIMENSION mm W x D x H	BOX DIMENSION inch W x D x H	BOX WEIGHT KG	BOX WEIGHT LB	STOCK IN AMERICA MSRP PRICING USD METER	FOOT	EACH	BOX
50S	U2441G50SL42	4200	165 3/8"	10	4250 x 255 x 85	167 3/8" x 10" x 3 3/8"	24.00	52.91	23.995	7.314	100.779	1007.790
									AVAILABLE FROM ITALY MSRP PRICING USD			
LU5	R2441GLU5L42	4200	165 3/8"		<<<<< MINIMUM ORDER AND PACKAGING TO BE CONFIRMED >>>>>				29.482	8.986	123.824	
S2R	R2441GS2RL42	4200	165 3/8"		<<<<< MINIMUM ORDER AND PACKAGING TO BE CONFIRMED >>>>>				31.065	9.469	130.473	
S2Q	R2441GS2QL42	4200	165 3/8"		<<<<< MINIMUM ORDER AND PACKAGING TO BE CONFIRMED >>>>>				30.169	9.196	126.710	

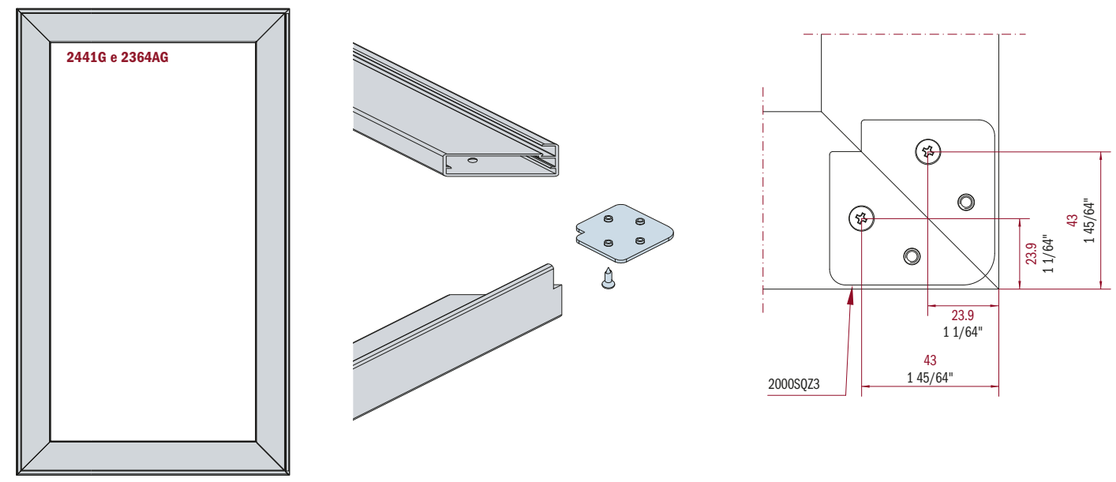

2465G

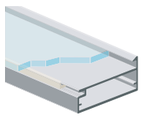

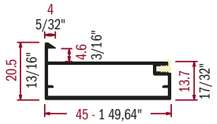

ALUMINUM DOOR PROFILE
45° joint with joint plate.
Aluminum door profile with frontal gasket and short angled insert lip: easier to assemble and a more elegant appearance than other doors with gasket.
50S Aluminum Clear Anodize
LU5 Aluminum Chrome Anodize
S2R Aluminum Copper Anodize
S2Q Aluminum Gold Anodize
Other Colors and Lengths Available FROM ITALY

PROFILÉ EN ALUMINIUM POUR PORTE
45 ° conjointes avec plaque commune.
Profilé en aluminium pour porte avec joint d'étanchéité frontal et lèvre d'insertion courte à angle: plus facile à assembler avec un aspect plus élégant que les autres portes avec joint d'étanchéité.
50S Aluminium Clair Anodisé
LU5 Aluminium Chrome Anodisé
S2R Aluminium Cuivre Anodisé
S2Q Aluminium Or Anodisé
Autres Couleurs et Longueurs Disponibles DE L'ITALIE

PERFILES EN ALUMINIO PARA PUERTAS
45 ° conjuntas con placa de articulación.
Perfil en aluminio para puerta con guarnicion frontal y labio de inserción corto: más fácil de montar y con una apariencia más elegante que otras puertas con guarnicion.
50S Aluminio Anodizado Claro
LU5 Aluminio Anodizado Chrome
S2R Aluminio Anodizado Cobre
S2Q Aluminio Anodizado Oro
Otros Colores y Dimensiones Disponibles DE ITALIA

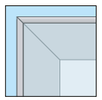
Standard

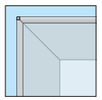
With Corner Bumper

SEAL GASKET FOR 4 MM GLASS	JOINT PLATE	SCREWS
2402AGV	2000SQZ3	VAZB4X08TSP

COLORS	ITEM NUMBER	LENGTH mm	LENGTH inch	PCS PER BOX	BOX DIMENSION mm W x D x H	BOX DIMENSION inch W x D x H	BOX WEIGHT KG	BOX WEIGHT LB	STOCK IN AMERICA MSRP PRICING USD METER	FOOT	EACH	BOX
50S	U2465G50SL41	4150	163 3/8"	10	4250 x 125 x 95	167 3/8" x 4 7/8" x 3 3/4"	25.00	55.12	25.995	7.923	107.879	1078.793
									AVAILABLE FROM ITALY MSRP PRICING USD			
LU5	R2465GLU5L41	4150	163 3/8"	<<<<< MINIMUM ORDER AND PACKAGING TO BE CONFIRMED >>>>>					34.321	10.461	142.432	
S2R	R2465GS2RL41	4150	163 3/8"	<<<<< MINIMUM ORDER AND PACKAGING TO BE CONFIRMED >>>>>					33.365	10.170	138.465	
S2Q	R2465GS2QL41	4150	163 3/8"	<<<<< MINIMUM ORDER AND PACKAGING TO BE CONFIRMED >>>>>					34.641	10.559	143.760	

CSP0081

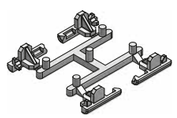

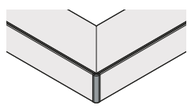

PLASTIC CORNER BUMPER FOR PROFILE 2465.
Can be used in addition to the standard squares and screws to round the corners of the doors avoiding sharp edges. Requires an extra 3 mm 90° cut on the sections (see design).
13 Color Match 50S Clear Anodize
31 Color Match LU5 Chrome Anodize
70 Color match S2R Copper Anodize
71 Color match S2Q Gold Anodize

PARE-CHOCS DE COIN EN PLASTIQUE POUR PROFILÉ 2465.
Il peut être utilisé en plus des équerres et vis standard pour arrondir les coins des portes en évitant les angles aigus. Nécessite une coupe supplémentaire de 3mm à 90° sur les sections (voir design).
13 Color Match 50S Clair Anodisé
31 Color Match LU5 Chrome Anodisé
70 Color Match S2R Cuivre Anodisé
71 Color Match S2Q Or Anodisé

ESQUINA DE PLÁSTICO PARAGOLPES PARA PERFIL 2465.
Se puede utilizar, además de las esquadras y tornillos estándar para redondear las esquinas de las puertas y evitar las esquinas agudas. Requiere un recorte adicional de 3 mm a 90 ° en la seccion (ver diseño).
13 Ajuste de Color 50S Claro Anodizado
31 Ajuste de Color LU5 Chrome Anodizado
70 Ajuste de Color S2R Anodizado Cobre
71 Ajuste de Color S2Q Anodizado Oro

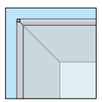

COLORS	ITEM NUMBER	KIT PER BOX	BOX DIMENSION mm W x D x H	BOX DIMENSION inch W x D x H	BOX WEIGHT KG	BOX WEIGHT LB	STOCK IN AMERICA MSRP PRICING USD KIT	BOX
13	UCSP0081-13	25	150 x 200 x 100	5 7/8" x 7 7/8" x 3 7/8"	1.50	3.31	2.120	53.000
							AVAILABLE FROM ITALY MSRP PRICING USD	
31	CSP0081-31	<<<<< MINIMUM ORDER AND PACKAGING TO BE CONFIRMED >>>>>					2.415	
70	CSP0081-70	<<<<< MINIMUM ORDER AND PACKAGING TO BE CONFIRMED >>>>>					2.954	
71	CSP0081-71	<<<<< MINIMUM ORDER AND PACKAGING TO BE CONFIRMED >>>>>					2.954	

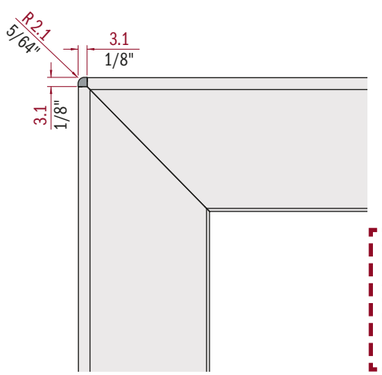

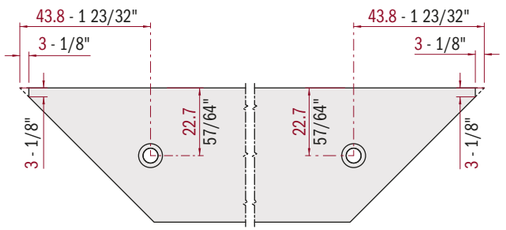

WARNING: It is possible to assemble the 2465 sections with the standard 45° cut using squares and screws; when adding the Plastic Corner Bumper CSP0081 an additional 3mm 90° cut is required on the edge of the sections.

WARNING: *Il est possible d'assembler les sections 2465 avec les coupes standards à 45° en utilisant les équerres et vis; lorsque vous ajoutez les pare-chocs de coin en plastique CSP0081, une coupe supplémentaire de 3 mm à 90° est nécessaire sur le bout des sections.*

WARNING: Es posible montar las secciones 2465 con el cortes estándar a 45° utilizando las esquadras y tornillos; cuando se agrega las esquina de plastico paragolpes CSP0081, un recorte adicional de 3 mm a 90 ° se requiere en las seccion.

2363AG

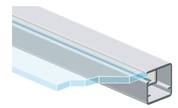

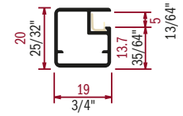

ALUMINUM DOOR PROFILE
50S Aluminum Clear Anodize
S2I Aluminum Titanium Anodize
V12 Aluminum Black Matt Powder Coated
LU5 Aluminum Chrome Anodize
S2R Aluminum Copper Anodize
S2Q Aluminum Gold Anodize
Colors and Lengths Available FROM ITALY

PROFILÉ EN ALUMINIUM POUR PORTE
50S Aluminium Clair Anodisé
S2I Aluminium Titanium Anodize
V12 Aluminium Noir Mat Peint à Poudre
LU5 Aluminium Chrome Anodisé
S2R Aluminium Cuivre Anodisé
S2Q Aluminium Or Anodisé
Couleurs et Longueurs Disponibles DE L'ITALIE

PERFILES EN ALUMINIO PARA PUERTAS
50S Aluminio Anodizado Claro
S2I Aluminio Anodizado Titanio
V12 Aluminio Negro Mate Barnizado
LU5 Aluminio Anodizado Chrome
S2R Aluminio Anodizado Cobre
S2Q Aluminio Anodizado Oro
Colores y Dimensiones DE ITALIA

SEAL GASKET FOR 4 MM GLASS	JOINT PLATE	SCREWS
2357AGV	2001SQZ	VAZB4X08TSP

COLORS	ITEM NUMBER	LENGTH mm	LENGTH inch	PCS PER BOX	BOX DIMENSION mm W x D x H	BOX DIMENSION inch W x D x H	BOX WEIGHT KG	BOX WEIGHT LB	STOCK IN AMERICA MSRP PRICING USD METER	FOOT	EACH	BOX
50S	U2363AG50SL39	3900	153 9/16"	10	4150 x 95 x 65	163 3/8" x 3 3/4" x 2 1/2"	12.50	27.56	15.275	4.656	59.573	595.725
S2I	U2363AGS2IL39	3900	153 9/16"	10	4150 x 95 x 65	163 3/8" x 3 3/4" x 2 1/2"	12.50	27.56	24.985	7.615	97.442	974.415
V12	U2363AGV12L39	3900	153 9/16"	10	4150 x 95 x 65	163 3/8" x 3 3/4" x 2 1/2"	12.50	27.56	19.898	6.065	77.602	776.022
									AVAILABLE FROM ITALY MSRP PRICING USD			
LU5	R2363AGLU5L39	3900	153 9/16"	<<<<< MINIMUM ORDER AND PACKAGING TO BE CONFIRMED >>>>>					21.490	6.550	83.811	
S2R	R2363AGS2RL39	3900	153 9/16"	<<<<< MINIMUM ORDER AND PACKAGING TO BE CONFIRMED >>>>>					24.977	7.613	97.410	
S2Q	R2363AGS2QL39	3900	153 9/16"	<<<<< MINIMUM ORDER AND PACKAGING TO BE CONFIRMED >>>>>					25.463	7.761	99.306	

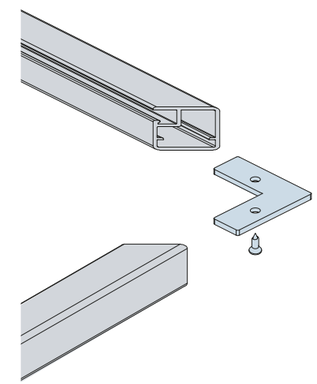

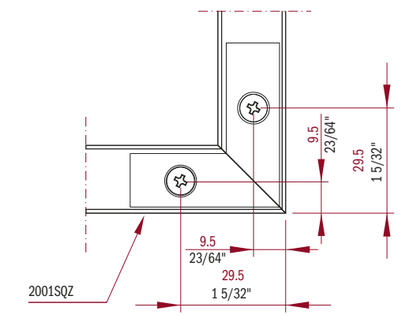

DOOR FRAMES

CADRES DE PORTES

MARCOS DE PUERTAS

2449G

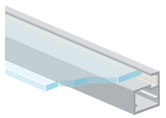

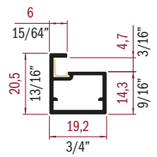

ALUMINUM DOOR PROFILE
50S Aluminum Clear Anodize
S2I Aluminum Titanium Anodize
V12 Aluminum Black Matt Powder Coated
LU5 Aluminum Chrome Anodize
S2R Aluminum Copper Anodize
S2Q Aluminum Gold Anodize
Colors and Lengths Available FROM ITALY

PROFILÉ EN ALUMINIUM POUR PORTE
50S Aluminium Clair Anodisé
S2I Aluminium Titanium Anodize
V12 Aluminium Noir Mat Peint à Poudre
LU5 Aluminium Chrome Anodisé
S2R Aluminium Cuivre Anodisé
S2Q Aluminium Or Anodisé
Couleurs et Longueurs Disponibles DE L'ITALIE

PERFILES EN ALUMINIO PARA PUERTAS
50S Aluminio Anodizado Claro
S2I Aluminio Anodizado Titanio
V12 Aluminio Negro Mate Barnizado
LU5 Aluminio Anodizado Chrome
S2R Aluminio Anodizado Cobre
S2Q Aluminio Anodizado Oro
Colores y Dimensiones DE ITALIA

SEAL GASKET FOR 4 MM GLASS	JOINT PLATE	SCREWS
2357AGV	2001SQZ	VAZB4X08TSP

COLORS	ITEM NUMBER	LENGTH mm	LENGTH inch	PCS PER BOX	BOX DIMENSION mm W x D x H	BOX DIMENSION inch W x D x H	BOX WEIGHT KG	BOX WEIGHT LB	STOCK IN AMERICA MSRP PRICING USD METER	FOOT	EACH	BOX
50S	U2449G50SL39	3900	153 9/16"	10	4150 x 95 x 65	163 3/8" x 3 3/4" x 2 1/2"	12.50	27.56	18.787	5.726	73.269	732.693
S2I	U2449GS2IL39	3900	153 9/16"	10	4150 x 95 x 65	163 3/8" x 3 3/4" x 2 1/2"	12.50	27.56	26.529	8.086	103.463	1034.631
V12	U2449GV12L39	3900	153 9/16"	10	4150 x 95 x 65	163 3/8" x 3 3/4" x 2 1/2"	12.50	27.56	20.159	6.144	78.620	786.201
									AVAILABLE FROM ITALY MSRP PRICING USD			
LU5	R2449GLU5L39	3900	153 9/16"		<<<<< MINIMUM ORDER AND PACKAGING TO BE CONFIRMED >>>>>				25.526	7.780	99.551	
S2R	R2449GS2RL39	3900	153 9/16"		<<<<< MINIMUM ORDER AND PACKAGING TO BE CONFIRMED >>>>>				24.442	7.450	95.324	
S2Q	R2449GS2QL39	3900	153 9/16"		<<<<< MINIMUM ORDER AND PACKAGING TO BE CONFIRMED >>>>>				25.467	7.762	99.321	

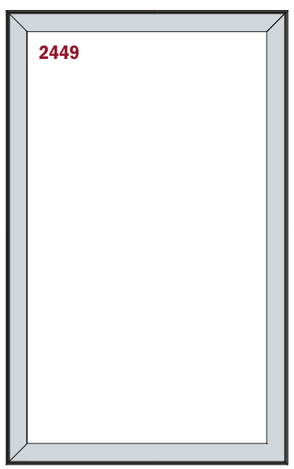

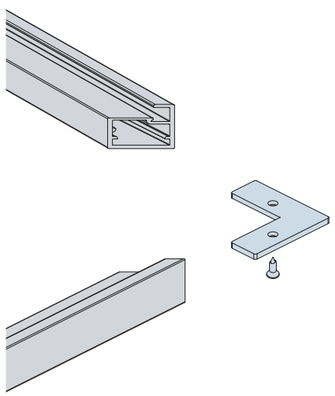

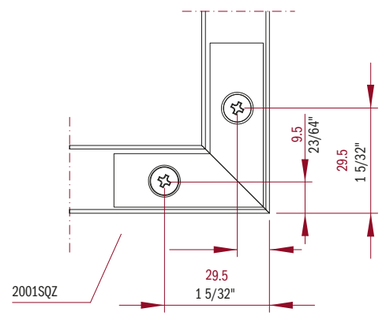

ALUMINIUM DOOR 20X20 FOR GLUED GLASS

PORTE EN ALUMINIUM 20X20 POUR VERRE COLLÉ

PUERTA ALUMINIO 20X20 PARA VIDRIO PEGADO

2636

ALUMINUM DOOR PROFILE
50S Aluminum Clear Anodize
S2I Aluminum Titanium Anodize
V12 Aluminum Black Matt Powder Coated
LU5 Aluminum Chrome Anodize
S2R Aluminum Copper Anodize
S2Q Aluminum Gold Anodize
Other Colors and Lengths Available FROM ITALY

PROFILÉ EN ALUMINIUM POUR PORTE
50S Aluminium Clair Anodisé
S2I Aluminium Titanium Anodize
V12 Aluminium Noir Mat Peint à Poudre
LU5 Aluminium Chrome Anodisé
S2R Aluminium Cuivre Anodisé
S2Q Aluminium Or Anodisé
Autres Couleurs et Longueurs Disponibles DE L'ITALIE

PERFILES EN ALUMINIO PARA PUERTAS
50S Aluminio Anodizado Claro
S2I Aluminio Anodizado Titanio
V12 Aluminio Negro Mate Barnizado
LU5 Aluminio Anodizado Chrome
S2R Aluminio Anodizado Cobre
S2Q Aluminio Anodizado Oro
Otros Colores y Dimensiones Disponibles DE ITALIA

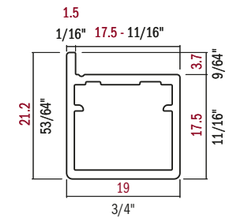

COLORS	ITEM NUMBER	LENGTH mm	LENGTH inch	PCS PER BOX	BOX DIMENSION mm W x D x H	BOX DIMENSION inch W x D x H	BOX WEIGHT KG	BOX WEIGHT LB	STOCK IN AMERICA MSRP PRICING USD METER	FOOT	EACH	BOX
50S	UR263650SL41	4100	161 7/16"	10	4150 x 145 x 44	163 3/8" x 5 3/4" x 1 3/4"	13.35	29.43	20.713	6.313	84.923	849.233
S2I	UR2636S2IL41	4100	161 7/16"	10	4150 x 145 x 44	163 3/8" x 5 3/4" x 1 3/4"	13.35	29.43	25.509	7.775	104.587	1045.869
V12	UR2636V12L41	4100	161 7/16"	10	4150 x 145 x 44	163 3/8" x 5 3/4" x 1 3/4"	13.35	29.43	21.469	6.544	88.023	880.229
									AVAILABLE FROM ITALY MSRP PRICING USD			
LU5	R2636LU5L41	4100	161 7/16"		<<<<< MINIMUM ORDER AND PACKAGING TO BE CONFIRMED >>>>>				30.856	9.405	126.510	
S2R	R2636S2RL41	4100	161 7/16"		<<<<< MINIMUM ORDER AND PACKAGING TO BE CONFIRMED >>>>>				32.619	9.942	133.738	
S2Q	R2636S2QL41	4100	161 7/16"		<<<<< MINIMUM ORDER AND PACKAGING TO BE CONFIRMED >>>>>				32.619	9.942	133.738	

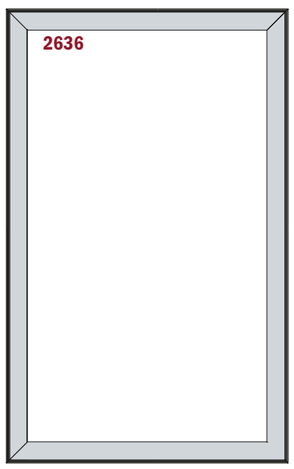

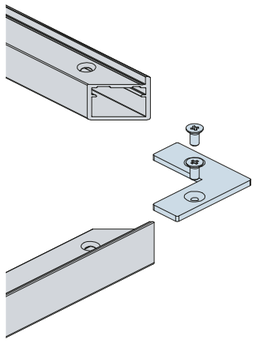

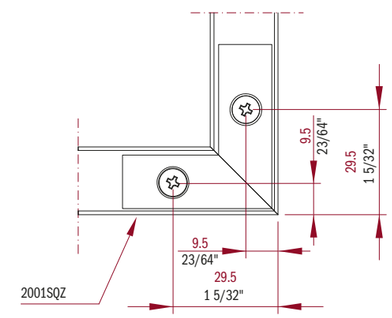

2582

ALUMINIUM HANDLE PROFILE
50S Aluminum Clear Anodize
S2I Aluminum Titanium Anodize
V12 Aluminum Black Matt Powder Coated
LU5 Aluminum Chrome Anodize
S2R Aluminum Copper Anodize
S2Q Aluminum Gold Anodize
Other Colors and Lengths Available FROM ITALY

PROFIL DE POIGNÉE EN ALUMINIUM
50S Aluminium Clair Anodisé
S2I Aluminium Titanium Anodize
V12 Aluminium Noir Mat Peint à Poudre
LU5 Aluminium Chrome Anodisé
S2R Aluminium Cuivre Anodisé
S2Q Aluminium Or Anodisé
Autres Couleurs et Longueurs Disponibles DE L'ITALIE

PERFIL TIRADOR DE ALUMINIO
50S Aluminio Anodizado Claro
S2I Aluminio Anodizado Titanio
V12 Aluminio Negro Mate Barnizado
LU5 Aluminio Anodizado Chrome
S2R Aluminio Anodizado Cobre
S2Q Aluminio Anodizado Oro
Otros Colores y Dimensiones Disponibles DE ITALIA

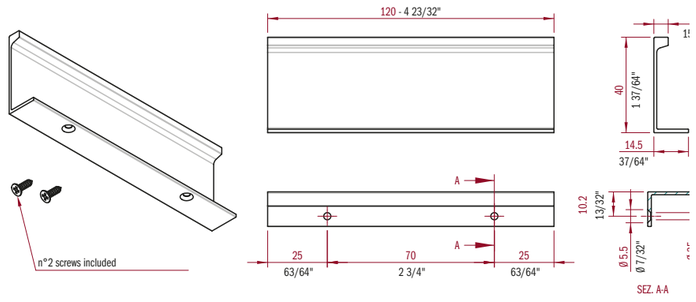

COLORS	ITEM NUMBER	LENGTH mm	LENGTH inch	KIT PER BOX	BOX DIMENSION mm W x D x H	BOX DIMENSION inch W x D x H	BOX WEIGHT KG	BOX WEIGHT LB	STOCK IN AMERICA MSRP PRICING USD METER	FOOT	EACH	BOX
50S	UCF.2582-50S	110	4 5/16"	10	280 x 85 x 60	11" x 3 3/8" x 2 3/8"	1.00	2.20			21.830	218.300
S2I	UCF.2582-S2I	110	4 5/16"	10	280 x 85 x 60	11" x 3 3/8" x 2 3/8"	1.00	2.20			37.295	372.950
V12	UCF.2582-V12	110	4 5/16"	10	280 x 85 x 60	11" x 3 3/8" x 2 3/8"	1.00	2.20			21.830	218.300
LU5	CF.2582-LU5	110	4 5/16"		<<<<< MINIMUM ORDER AND PACKAGING TO BE CONFIRMED >>>>>						19.260	
S2R	CF.2582-S2R	110	4 5/16"		<<<<< MINIMUM ORDER AND PACKAGING TO BE CONFIRMED >>>>>						31.275	
S2Q	CF.2582-S2Q	110	4 5/16"		<<<<< MINIMUM ORDER AND PACKAGING TO BE CONFIRMED >>>>>						31.275	

2637

ALUMINIUM HANDLE PROFILE
(requires machining)
50S Aluminum Clear Anodize
S2I Aluminum Titanium Anodize
V12 Aluminum Black Matt Powder Coated
LU5 Aluminum Chrome Anodize
S2R Aluminum Copper Anodize
S2Q Aluminum Gold Anodize
Other Colors and Lengths Available FROM ITALY

PROFIL DE POIGNÉE EN ALUMINIUM
(nécessite un usinage)
50S Aluminium Clair Anodisé
S2I Aluminium Titanium Anodize
V12 Aluminium Noir Mat Peint à Poudre
LU5 Aluminium Chrome Anodisé
S2R Aluminium Cuivre Anodisé
S2Q Aluminium Or Anodisé
Autres Couleurs et Longueurs Disponibles DE L'ITALIE

PERFIL TIRADOR DE ALUMINIO
(requiere mecanizado)
50S Aluminio Anodizado Claro
S2I Aluminio Anodizado Titanio
V12 Aluminio Negro Mate Barnizado
LU5 Aluminio Anodizado Chrome
S2R Aluminio Anodizado Cobre
S2Q Aluminio Anodizado Oro
Otros Colores y Dimensiones Disponibles DE ITALIA

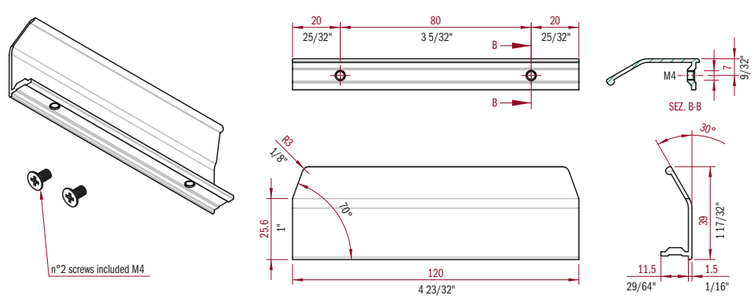

COLORS	ITEM NUMBER	LENGTH mm	LENGTH inch	KIT PER BOX	BOX DIMENSION mm W x D x H	BOX DIMENSION inch W x D x H	BOX WEIGHT KG	BOX WEIGHT LB	STOCK IN AMERICA MSRP PRICING USD METER	FOOT	EACH	BOX
50S	UCF.2637-50S	120	4 3/4"	10	280 x 85 x 60	11" x 3 3/8" x 2 3/8"	1.00	2.20			21.405	214.050
S2I	UCF.2637-S2I	120	4 3/4"	10	280 x 85 x 60	11" x 3 3/8" x 2 3/8"	1.00	2.20			35.026	350.260
V12	UCF.2637-V12	120	4 3/4"	10	280 x 85 x 60	11" x 3 3/8" x 2 3/8"	1.00	2.20			21.405	214.050
LU5	CF.2637-LU5	120	4 3/4"		<<<<< MINIMUM ORDER AND PACKAGING TO BE CONFIRMED >>>>>						19.251	
S2R	CF.2637-S2R	120	4 3/4"		<<<<< MINIMUM ORDER AND PACKAGING TO BE CONFIRMED >>>>>						30.861	
S2Q	CF.2637-S2Q	120	4 3/4"		<<<<< MINIMUM ORDER AND PACKAGING TO BE CONFIRMED >>>>>						30.861	

2637 TECHNICAL SPECIFICATION

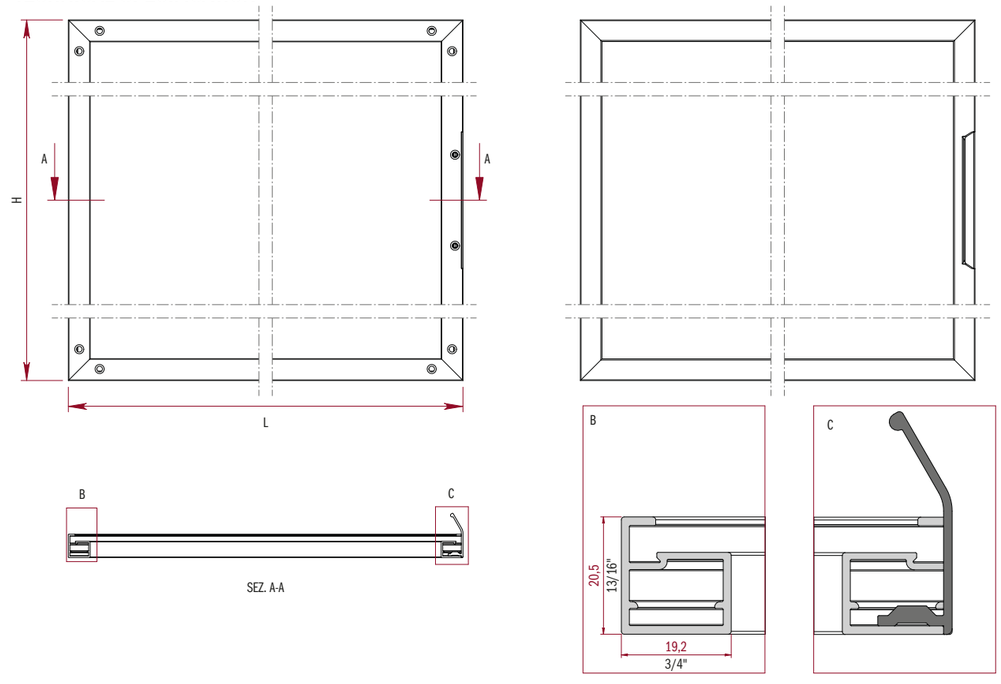

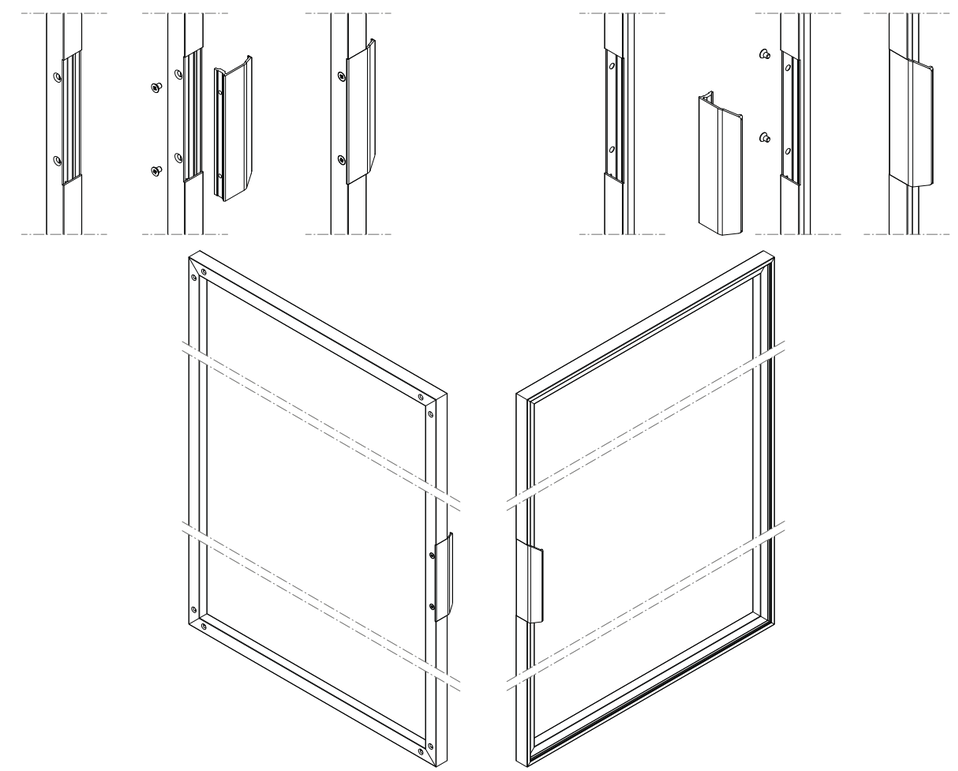

How...
Manufacturing Specifications

Comment...
Spécifications de Fabrication

Cómo...
Especificaciones de Fabricación

Doors with 45-degree junction - *Portes avec jonction à 45 degrés*
Puertas con uniones de 45 grados

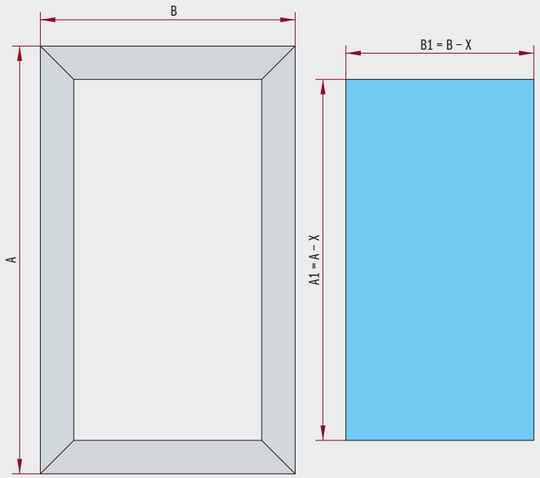

Doors with 90-degree junction - *Portes avec jonction à 90 degrés*
Puertas con uniones de 90 grados

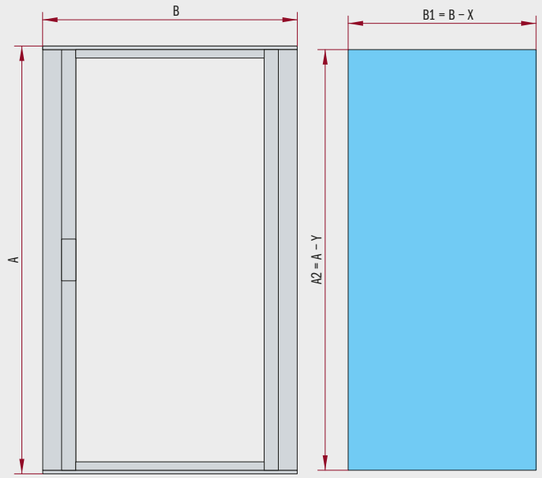

Doors with 45-degree junction - *Portes avec jonction à 45 degrés* - Puertas con uniones de 45 grados

ITEM NUMBER	X		Interspace	
	mm	inch	mm	inch
2363	27.00	1.063	1.00	0.039
2357	29.00	1.142	1.00	0.039
2465	4.00	0.157	1.00	0.039
2364	5.00	0.197	1.00	0.039
2441	5.00	0.197	1.00	0.039
2449	5.00	0.197	1.00	0.039
2446 / 2591	4.00	0.157	1.00	0.039
2505	90.00	3.543	1.00	0.039
2556	102.00	4.016	1.00	0.039
2586 / 2587	5.00	0.197	1.00	0.039
2636	3.50	0.137	0.50	0.019

Doors with 90-degree junction - *Portes avec jonction à 90 degrés* - Puertas con uniones de 90 grados

ITEM NUMBER	X		Y		Interspace	
	mm	inch	mm	inch	mm	inch
2556 - 2558	102.00	4.016	13.00	0.51	1.00	0.039

CF.0095

SQUARE AND SCREW KIT FOR ALUMINUM DOOR PROFILE
Square 2000SQZ3 (100pcs) + Screw VAZ-B4X08TSP (250pcs)

ENSEMBLE D'ÉQUERRE ET VIS POUR PROFILÉ EN ALUMINIUM DE PORTE
Équerre 2000SQZ3 (100pcs) + Vis VAZ-B4X08TSP (250pcs)

KIT DE ESCUADRAS Y TORNILLOS PARA PERFILES DE ALUMINIOS PARA PUERTAS
Escuadra 2000SQZ3 (100 piezas) + Tornillos VAZB4X08TSP (250)

ITEM NUMBER	KIT PER BOX	BOX DIMENSION mm W x D x H	BOX DIMENSION inch W x D x H	BOX WEIGHT KG	BOX WEIGHT LB	STOCK IN AMERICA MSRP PRICING USD EACH	STOCK IN AMERICA MSRP PRICING USD BOX
UCF.0095	1	220 x 165 x 140	8 5/8" x 6 1/2" x 5 1/2"	4.50	9.92	158.811	158.811
UCF.0095BLK	1	220 x 165 x 140	8 5/8" x 6 1/2" x 5 1/2"	4.50	9.92	158.811	158.811

CF.0250

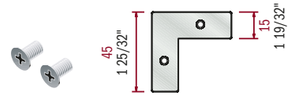

SQUARE AND SCREW KIT FOR ALUMINUM DOOR PROFILE
Square 2001SQZ (100pcs) + Screw VAZ-B4X08TSP (250pcs)

ENSEMBLE D'ÉQUERRE ET VIS POUR PROFILÉ EN ALUMINIUM DE PORTE
Équerre 2001SQZ (100pcs) + Vis VAZ-B4X08TSP (250pcs)

KIT DE ESCUADRAS Y TORNILLOS PARA PERFILES DE ALUMINIOS PARA PUERTAS
Escuadra 2001SQZ (100 piezas) + Tornillos VAZB4X08TSP (250)

ITEM NUMBER	KIT PER BOX	BOX DIMENSION mm W x D x H	BOX DIMENSION inch W x D x H	BOX WEIGHT KG	BOX WEIGHT LB	STOCK IN AMERICA MSRP PRICING USD EACH	STOCK IN AMERICA MSRP PRICING USD BOX
UCF.0250	1	215 x 160 x 130	8 1/2" x 6 1/4" x 5 1/8"	4.50	9.92	127.990	127.990
UCF.0250BLK	1	215 x 160 x 130	8 1/2" x 6 1/4" x 5 1/8"	4.50	9.92	127.990	127.990

2357AGV

REPLACEMENT GASKET FOR ALUMINUM DOOR PROFILE
For 4 mm glass

JOINT D'ÉTANCHÉITÉ DE REMPLACEMENT POUR PROFILÉ EN ALUMINIUM DE PORTE
Pour verre 4 mm

GUARNICION PARA PERFILES DE ALUMINIO PARA PUERTAS
Para vidrio de 4 mm

ITEM NUMBER		LENGTH mm	LENGTH inch	PCS PER BOX	BOX DIMENSION mm W x D x H	BOX DIMENSION inch W x D x H	BOX WEIGHT KG	BOX WEIGHT LB	STOCK IN AMERICA MSRP PRICING USD METER	FOOT	EACH	BOX
UR2357AGV.01	FOR 4 MM GLASS	1283	50 1/2"	50	1330 x 95 x 65	52 3/8" x 3 3/4" x 2 1/2"	1.10	2.43	4.601	1.402	5.903	295.154

2364AGV

REPLACEMENT GASKET FOR ALUMINUM DOOR PROFILE
For 3 mm glass

JOINT D'ÉTANCHÉITÉ DE REMPLACEMENT POUR PROFILÉ EN ALUMINIUM DE PORTE
Pour verre 3 mm

GUARNICION PARA PERFILES DE ALUMINIO PARA PUERTAS
Para vidrio de 3 mm

ITEM NUMBER		LENGTH mm	LENGTH inch	PCS PER BOX	BOX DIMENSION mm W x D x H	BOX DIMENSION inch W x D x H	BOX WEIGHT KG	BOX WEIGHT LB	STOCK IN AMERICA MSRP PRICING USD METER	FOOT	EACH	BOX
UR2364AGV.14	FOR 3 MM GLASS	1400	55 1/8"	50	1508 x 95 x 65	59 3/8" x 3 3/4" x 2 1/2"	1.28	2.82	4.576	1.395	6.406	320.320

959

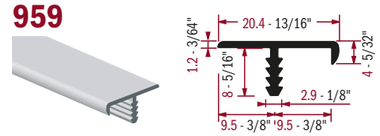

ALUMINUM EDGE PROFILE FOR DOOR
50S Aluminum Clear Anodize

PROFILÉ EN ALUMINIUM POUR BORDURE DE PORTE
50S Aluminium Clair Anodisé

PERFILES DE CANTOS DE ALUMINIO PARA PUERTAS
50S Aluminio Anodizado Claro

COLORS	ITEM NUMBER	LENGTH mm	LENGTH inch	PCS PER BOX	BOX DIMENSION mm W x D x H	BOX DIMENSION inch W x D x H	BOX WEIGHT KG	BOX WEIGHT LB	STOCK IN AMERICA MSRP PRICING USD METER	FOOT	EACH	BOX
50S	U95950SL27	2670	105 1/8"	20	2740 x 95 x 65	107 7/8" x 3 3/4" x 2 1/2"	6.50	14.33	9.254	2.821	24.708	494.164
50S	U95950SL39	3900	153 9/16"	20	3950 x 95 x 70	155 1/2" x 3 3/4" x 2 3/4"	11.00	24.25	8.577	2.614	33.450	669.006

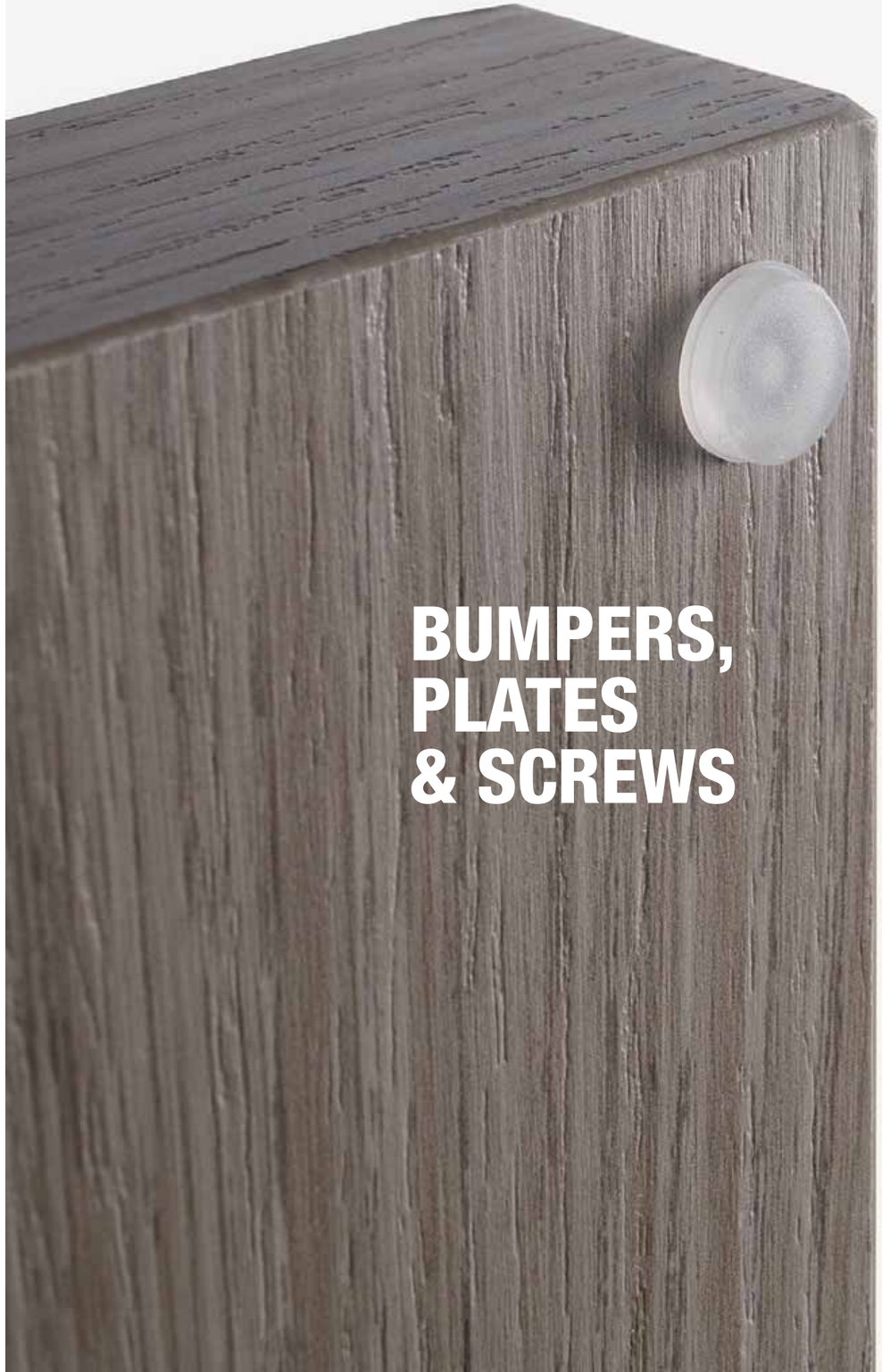

BUMPERS, PLATES & SCREWS

175

SCREWS AND JOINTS
Diam. 5 complete metal joining screw.

VIS ET JOINTS
Vis de jonction diam. 5 complète en métal.

TORNILLOS Y UNIONES
Tornillo de union Ø 5 mm de metal completo.

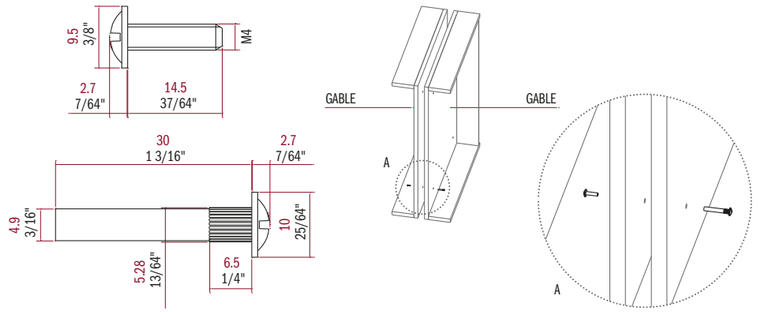

ITEM NUMBER	PAIRS PER BOX	BOX DIMENSION mm W x D x H	BOX DIMENSION inch W x D x H	BOX WEIGHT KG	BOX WEIGHT LB	STOCK IN AMERICA MSRP PRICING USD EACH	STOCK IN AMERICA MSRP PRICING USD BOX
V175/FM/30/MS/15	2000	250 x 170 x 170	9 7/8" x 6 3/4" x 6 3/4"	8.30	18.30	0.216	432.000

226

SHOCK ABSORBERS
New double-material shock absorber with pin and under-head rigid Ø 5 mm, smooth rubber head. Particularly suitable for use with automatic machines.
Transparent Color

TAMPONS AMORTISSEURS
Nouveau tampon amortisseur double matériau avec pied et sous tête rigide Ø 5 mm, tête lisse en caoutchouc. Particulièrement adapté pour l'utilisation sur des machines automatiques.
Couleur Transparente

AMORTIGUADORES
Nuevo amortiguador bimaterial con pasador de Ø 5 mm, y parte bajo de la cabeza rigidos, cabeza lisa de goma. Particularmente adequado para colocacion con maquinas automaticas.
Color Transparente

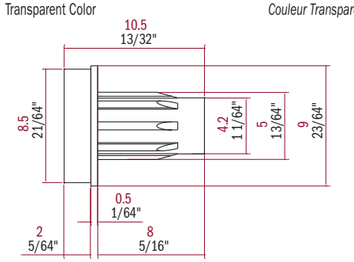

ITEM NUMBER	PCS PER BOX	BOX DIMENSION mm W x D x H	BOX DIMENSION inch W x D x H	BOX WEIGHT KG	BOX WEIGHT LB	STOCK IN AMERICA MSRP PRICING USD EACH	STOCK IN AMERICA MSRP PRICING USD BOX
V226/TL/TRA	1000	100 x 100 x 50	3 7/8" x 3 7/8" x 2"	0.30	0.66	0.155	155.000

VE03

SCREWS AND JOINTS
Screw EURO TSP, diam. 6.3.

VIS ET JOINTS
Vis EURO TSP, diam. 6,3.

TORNILLOS Y UNIONES
Tornillo EURO TSP, diam. 6,3.

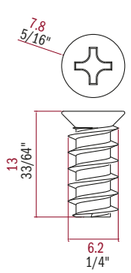

ITEM NUMBER	PCS PER BOX	BOX DIMENSION mm W x D x H	BOX DIMENSION inch W x D x H	BOX WEIGHT KG	BOX WEIGHT LB	STOCK IN AMERICA MSRP PRICING USD EACH	STOCK IN AMERICA MSRP PRICING USD BOX
WE03	2500	240 x 140 x 100	9 1/2" x 5 1/2" x 3 7/8"	5.00	11.02	0.096	240.000

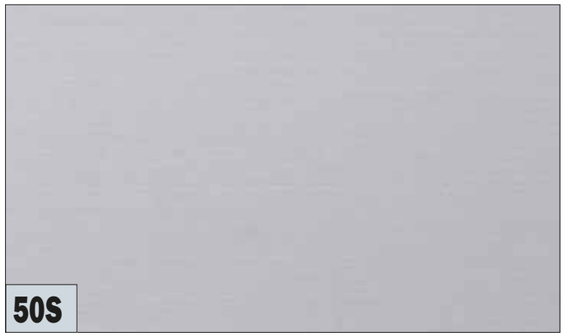

Aluminum Clear Anodize *Aluminium Clair Anodisé* Aluminio Anodizado Claro

Aluminum White Semi-Gloss Powder Coated *Aluminium Blanc Semi-Lustre Peint à Poudre* Aluminio Blanco Semi-Brillo Barnizado

Aluminum Titanium Anodize *Aluminium Titanium Anodisé* Aluminio Anodizado Titanio

Aluminum Black Matt Powder Coated *Aluminium Noir Mat Peint à Poudre* Aluminio Negro Mate Barnizado

Aluminum Stainless Anodize *Aluminium Inox Anodisé* Aluminio Anodizado Inox

Aluminum Chrome Anodize *Aluminium Chrome Anodisé* Aluminio Anodizado Cromo

Aluminum Copper Anodize *Aluminium Cuivre Anodisé* Aluminio Anodizado Cobre

Aluminum Gold Anodize *Aluminium Or Anodisé* Aluminio Anodizado Oro

Notes

Conversion Table

1" = 25.4 millimeters 1 millimeters = 0.3937"

inch		mm
1/64"	0.0156"	0.397
1/32"	0.0313"	0.794
3/64"	0.0469"	1.191
1/16"	0.0625"	1.588
5/64"	0.0781"	1.984
3/32"	0.0938"	2.381
7/64"	0.1094"	2.778
1/8"	0.1250"	3.175
9/64"	0.1406"	3.572
5/32"	0.1563"	3.969
11/64"	0.1719"	4.366
3/16"	0.1875"	4.763
13/64"	0.2031"	5.159
7/32"	0.2188"	5.556
15/64"	0.2344"	5.953
1/4"	0.2500"	6.350

inch		mm
17/64"	0.2656"	6.747
9/32"	0.2813"	7.144
19/64"	0.2969"	7.541
5/16"	0.3125"	7.938
21/64"	0.3281"	8.334
11/32"	0.3438"	8.731
23/64"	0.3594"	9.128
3/8"	0.3750"	9.525
25/64"	0.3906"	9.922
13/32"	0.4063"	10.319
27/64"	0.4219"	10.716
7/16"	0.4375"	11.113
29/64"	0.4531"	11.509
15/32"	0.4688"	11.906
31/64"	0.4844"	12.303
1/2"	0.5000"	12.700

inch		mm
33/64"	0.5156"	13.097
17/32"	0.5313"	13.494
35/64"	0.5469"	13.891
9/16"	0.5625"	14.288
37/64"	0.5781"	14.684
19/32"	0.5938"	15.081
39/64"	0.6094"	15.478
5/8"	0.6250"	15.875
41/64"	0.6406"	16.272
21/32"	0.6563"	16.669
43/64"	0.6719"	17.066
11/16"	0.6875"	17.463
45/64"	0.7031"	17.859
23/32"	0.7188"	18.256
47/64"	0.7344"	18.653
3/4"	0.7500"	19.050

inch		mm
49/64"	0.7656"	19.447
25/32"	0.7813"	19.844
51/64"	0.7969"	20.241
13/16"	0.8125"	20.638
53/64"	0.8281"	21.034
27/32"	0.8438"	21.431
55/64"	0.8594"	21.828
7/8"	0.8750"	22.225
57/64"	0.8906"	22.622
29/32"	0.9063"	23.019
59/64"	0.9219"	23.416
15/16"	0.9375"	23.813
61/64"	0.9531"	24.209
31/32"	0.9688"	24.606
63/64"	0.9844"	25.003
1"	1.0000"	25.400

GENERAL TERMS AND CONDITIONS OF SALE

CONDITIONS GENERALES DE VENTE

CONDICIONES GENERALES DE VENTA

The following General Terms and Conditions of Sale ("Terms and Conditions") govern the sales of kitchen components, accessories and related products ("Product") by Scilm America, Inc. ("Scilm America") to you ("Buyer"). Any term or condition in any order, confirmation or other document furnished by Buyer which is additional to, different from, or conflicting with these Terms and Conditions is expressly rejected and will not be binding upon Scilm America unless specifically agreed to in writing by Scilm America.

1. **ACCEPTANCE OF ORDERS.** All orders of Buyer are subject to Scilm America's written acknowledgment ("Order Acknowledgment").

2. **CANCELLATION OF ORDERS**. Scilm America's Order Acknowledgments are final and binding. Orders may not be cancelled without the prior written consent of Scilm America.

3. **PRICES.** Prices are as stated on Scilm America's Order Acknowledgment.

4. **PAYMENT.** Payment terms are as stated on Scilm America's Order Acknowledgment. Interest in the amount of 1% per month (12% per year) or the highest rate allowed by law, whichever is less, shall apply on all past due balances until such balances are fully paid. Should it become necessary for Scilm America to collect any past due balances by legal proceedings or otherwise, Buyer agrees to pay all costs of collection, including, without limitation, reasonable attorney's fees and court costs, incurred by Scilm America.

5. **SHIPPING.** Shipping terms are as stated on Scilm America's Order Acknowledgment. Unless otherwise agreed in writing by Scilm America (i) Buyer shall make all arrangements (and shall pay all costs) for the transportation and handling of the Product, (ii) delivery shall be deemed complete and title and risk of loss or damage to the Product shall pass to Buyer upon acceptance of shipment by a carrier, subject to Scilm America's right to be paid in full, (iii) Scilm America shall not be responsible to obtain and/or maintain for the account of Buyer any insurance against loss or damage to the Product in transit and the cost of any such insurance shall be borne by Buyer.

6. **DELIVERY.** The delivery dates set forth in Scilm America's Order Acknowledgments are estimates only. Scilm America shall make commercially reasonable efforts to deliver the Product in accordance with these dates; provided, however, that Scilm America shall not be liable for failure to deliver the Product as estimated.

7. **CLAIMS.** All claims against Scilm America for defects, errors or shortages must be made by Buyer in writing and notified to Scilm America within ten (10) days of receipt of the Product by Buyer. Failure by Buyer to make any claim against Scilm America within ten (10) days of receipt of the Product shall be deemed acceptance of the Product and a waiver of any and all defects, errors or shortages. Notwithstanding the foregoing, any use or transfer of the Product by Buyer, its agents, employees, contractors or licensees, for any purpose, after delivery thereof, shall constitute acceptance of that Product by Buyer.

8. **RETURNS OR EXCHANGES.** All sales of Product are final. No Product may be returned or exchanged without the prior written consent of Scilm America.

9. **INTELLECTUAL PROPERTY RIGHTS.** Any sale of Product hereunder shall not convey any express or implied license under any patent, copyright, trademark or other proprietary rights owned or controlled by Scilm America, whether relating to the Product or any manufacturing process or other matter. All rights under any such patent, copyright, trademark or other proprietary rights are expressly reserved by Scilm America. Buyer shall indemnify, hold harmless and defend Scilm America against any claim, loss, damage, expense and cost, including, without limitation, reasonable attorney's fees, resulting from or otherwise relating to any claimed infringement of patent, copyright, trademark or other proprietary rights arising out of compliance by Scilm America with Buyer's designs, specifications and instructions.

10. **DISCLAIMER OF WARRANTIES. SCILM AMERICA MAKES NO WARRANTY TO BUYER AND BUYER'S CUSTOMERS THAT THE PRODUCT DELIVERED TO BUYER HEREUNDER IS MERCHANTABLE OF FIT FOR ANY PARTICULAR PURPOSE, AND THERE ARE NO WARRANTIES, EXPRESS OR IMPLIED, WHICH EXTEND BEYOND THE DESCRIPTION OF THE PRODUCT CONTAINED ON SCILM AMERICA'S ORDER ACKNOWLEDGMENT. SCILM AMERICA MAKES NO WARRANTY TO BUYER AND BUYER'S CUSTOMERS THAT THE PRODUCT IS DELIVERED FREE OF THE RIGHTFUL CLAIM OF ANY THIRD PERSON BY WAY OF INFRINGEMENT OR THE LIKE.**

11. **LIMITATION OF LIABILITY. SCILM AMERICA'S LIABILITY IN DAMAGES OR OTHERWISE SHALL IN NO EVENT EXCEED IN THE AGGREGATE THE TOTAL PURCHASE PRICE, IF ANY, RECEIVED BY SCILM AMERICA FOR THE PRODUCT. IN NO EVENT SHALL SCILM AMERICA BE LIABLE FOR ANY INDIRECT, INCIDENTAL OR CONSEQUENTIAL DAMAGES, WHETHER BASED ON CONTRACT, INDEMNITY, WARRANTY, MISREPRESENTATION, TORT, NEGLIGENCE, STRICT LIABILITY OR ANY OTHER THEORY. THE FOREGOING LIMITATIONS APPLY TO BOTH BUYER AND BUYER'S CUSTOMERS.**

12. **FORCE MAJEURE.** Scilm America shall not be liable for any loss, damage, delay or failure to perform, in whole or in part, resulting from causes beyond the control of either Scilm America or Scilm America's suppliers, including, without limitation, acts of God, war, acts of terrorism, insurrections, riots, embargoes, fires, strikes, delays in transportation, inability to obtain supplies of raw materials, blackouts or governmental laws, regulations, orders or actions.

13. **PRODUCT SAFETY.** Buyer shall be solely responsible for compliance with all laws, rules, regulations and industry safety standards applicable to the distribution, sale and use of the Product supplied by Scilm America. Buyer shall cause all individuals and entities buying or otherwise obtaining the Product from Buyer to comply with such laws, rules, regulations and industry safety standards. Buyer shall indemnify, hold harmless and defend Scilm America against any claim, loss, damage, expense and cost, including, without limitation, reasonable attorney's fees and court costs, resulting from or otherwise relating to any claimed failure by Buyer to comply or cause any individual or entity to comply with such laws, rules, regulations and industry safety standards.

14. **EXPORT CONTROL.** Buyer shall comply fully with all administration and export control laws and regulations of the U.S. government as may be applicable to the export, resale or other disposition of any Product purchased from Scilm America.

15. **APPLICABLE LAW.** The laws of the State of New York (without giving effect to its conflicts of law principles) govern all matters arising out of or relating to these Terms and Conditions, including, without limitation, its validity, interpretation, construction, performance, and enforcement. With respect to international sales, the parties agree that the United Nations Convention on Contracts for the International Sale of Goods does not apply to these Terms and Conditions.

16. **DISPUTES.** Any party bringing any legal action or proceeding against the other party arising out of or relating to these Terms and Conditions shall bring such legal action or proceeding in the United States District Court for the Southern District of New York or in any court of the State of New York sitting in New York City. Notwithstanding the foregoing, any controversy or claim, including, without limitation, any controversy or claim based on misrepresentation, negligence or strict liability, arising out of or relating to these Terms and Conditions, which involves an amount in excess of $50,000, exclusive of interest and costs, shall be settled by arbitration in the City of New York, State of New York, in accordance with the rules of the American Arbitration Association then in effect. The arbitration is to be held before a single arbitrator. The decision in such arbitration shall be final and binding and any award rendered thereon may be entered in any court having jurisdiction.

17. **NOTICES.** Any notice required or permitted to be given under these Terms and Conditions shall be made in writing and shall be deemed to have been given (i) if personally delivered, or (ii) if sent by registered or certified mail, postage prepaid, return receipt requested, or (iii) if sent by nationally or internationally recognized delivery service, or (iv) if sent by facsimile, to the address and fax number indicated by Scilm America in its first Order Acknowledgment and by Buyer in its first order to Scilm America. Notices shall be deemed to have been received (i) immediately, if personally delivered, or (ii) upon receipt as indicated by the date on the signed receipt, if sent by registered or certified mail, postage prepaid, return receipt requested, or by nationally or internationally recognized delivery service, or (iii) upon receipt by the party giving the notice of a transmission report generated by the machine from which the facsimile was sent indicating that the facsimile was sent in its entirety to the addressee's facsimile number, if sent by facsimile. Either party may from time to time change the address or fax number to which notices to it shall be given by giving notice of such change to the other party in the manner provided for herein.

18. **GENERAL PROVISIONS.** These Terms and Conditions and Scilm America's Order Acknowledgments constitute the final and integrated agreement of Scilm America and Buyer and supersede all prior negotiations, proposals, quotations, proforma invoices, understandings and agreements (except any prior written commercial credit agreement in effect between the parties), whether oral or written, relating to the Product or the subject matter of these Terms and Conditions. Any representation, warranty, course of dealing or trade usage not expressly contained or referenced herein shall no be binding upon Scilm America. No modification, amendment, rescission, waiver or other change in these Terms of Sale shall be binding upon Scilm America unless specifically agreed to in writing by Scilm America. The invalidity or unenforceability, in whole or in part, of any provision herein shall not affect the validity or enforceability of any other provision herein. Failure or delay on the part of Scilm America to exercise any right, power, privilege or remedy herein shall not constitute a waiver hereof. The section headings contained herein are for convenience of reference only and are not to be used in the construction or interpretation of these Terms and Conditions. All words used herein shall be construed to be of such gender and number as the circumstances require.

ACCEPTED AND AGREED

COMPANY: _____

NAME: _____

TITLE: _____

DATE: _____

SIGNATURE: _____

scilm AMERICA
furniture technology for kitchens

SCILM AMERICA HAS THE RIGHT TO INTRODUCE MODIFICATIONS WITHOUT NOTICE
SCILM AMERICA A LE DROIT D'APPORTER DES MODIFICATIONS SANS PRÉAVIS
SCILM AMERICA TIENE EL DERECHO DE INTRODUCIR MODIFICACIONES SIN PREVIO AVISO

Photo credit: Armony Cucine spa
Graphic: Bassodesign

Printed on Recycled Paper

scilm-america

scilmamerica

scilmamerica

scilm america inc.
Mailing Address:
1835 E Hallandale Bch Blvd - Ste 590
Hallandale Beach, FL 33009 USA

Warehouse Address:
2101 Nevada Blvd, Ste F
Charlotte, NC 28273 USA

T 954.323.0123 - F 954.281.5434
info@scilmamerica.com - www.scilmamerica.com

scilm®
AMERICA

European Manufacturer and Provider Components, profiles, and systems for the woodworking cabinet industry

AVAILABLE IN STOCK IN OUR WAREHOUSE
IN CHARLOTTE, NC 28273

- → Aluminum Gola Profiles: C and J Channels
- → Aluminum Door Profiles
- → Aluminum Closet System Profiles
- → Aluminum Structure System Profiles
- → Aluminum Shelving System Profiles
- → Drawer Accessories
- → Drip Pans
- → Leg Levelers and Toe Kick

scilmamerica.com