PARTITION SEPARATION

Prevention and Solutions

WHAT IS PARTITION SEPARATION?

Partition separation is cracking that develops between interior partition walls and ceiling or floor finishes, usually characterized by gaps opening in winter and closing in summer.

WHAT CAUSES PARTITION SEPARATION?

Building Settlement

- Footings improperly sized for soil-bearing capacity.
- Shallow footings, subject to freeze/thaw cycles.
- Footings at or near seasonally fluctuating water tables. Many clay soil conditions expand and contract as water migrates in and out. This results in a reaction with building systems, which may erroneously appear as roof truss uplift.

Inconsistent Framing Practices

- Uneven stud lengths.
- Trusses designed with bottom chord camber may not be dealt with appropriately in the field.

Moisture Effects

- Individual wood members used in a typical platform-framed structure shrink and swell significantly on a seasonal basis, due to changes in the moisture content of the building.

Deflection

- When a floor system or center beam carrying the floor system is not stiff enough to carry all applied loads, excessive deflection occurs, and the finish may crack.

Truss Arching

- According to the best available data, roof truss movement occurs only in approximately 20% of reported cases of partition separation. This movement is typically due to differences in the moisture content between the top and bottom chords of the truss. Arching has not been associated with structural problems such as truss failure. In fact, the stresses that cause roof truss arching or uplift are testimony to the structural integrity of metal plate connected wood trusses.

Combination of Factors

- Partition separation is often caused by a combination of the factors listed above.

PREVENTING PARTITION SEPARATION

Preventive action during construction is the best way to avoid costly repair work.

- In many cases, installing properly balanced attic ventilation helps prevent partition separation. Ventilation exhausts moisture from the air in the attic space. Continuous eave and ridge ventilation is most effective; however, it must be properly sized to handle exhausting the air volume within the attic space.
- A floating gypsum corner should be used, where appropriate. The Gypsum Association *Recommended Specifications for the Application and Finishing of Gypsum Board*, GA-216, states that the floating angle method of application should be used to minimize the possibility of fastener popping and cracking in areas adjacent to a wall and ceiling intersection. The details on the reverse have proven to minimize these problems.

DETERMINING THE CAUSE OF PARTITION SEPARATION HELPS DETERMINE THE SOLUTION!

To correct partition separation, first, determine the cause. Check the plane of interior, exterior, bearing, and non-load bearing walls, as well as the ceiling, with a builder's transit level or a laser level. This will determine what in the building has moved, and aid in planning the solution.

Specific solutions for partition separation should be handled on a case-by-case basis by a qualified building contractor. In the majority of cases, retrofitting floating corners with appropriate back blocking solves the problem.

Wood Truss Council of America

5937 Meadowood Drive Ste. 14 • Madison, WI 53711 • 608/274-4849 • 608/274-3329 (fax)

Copyright © 1995 Wood Truss Council of America, Inc.

Preventing Partition Separation

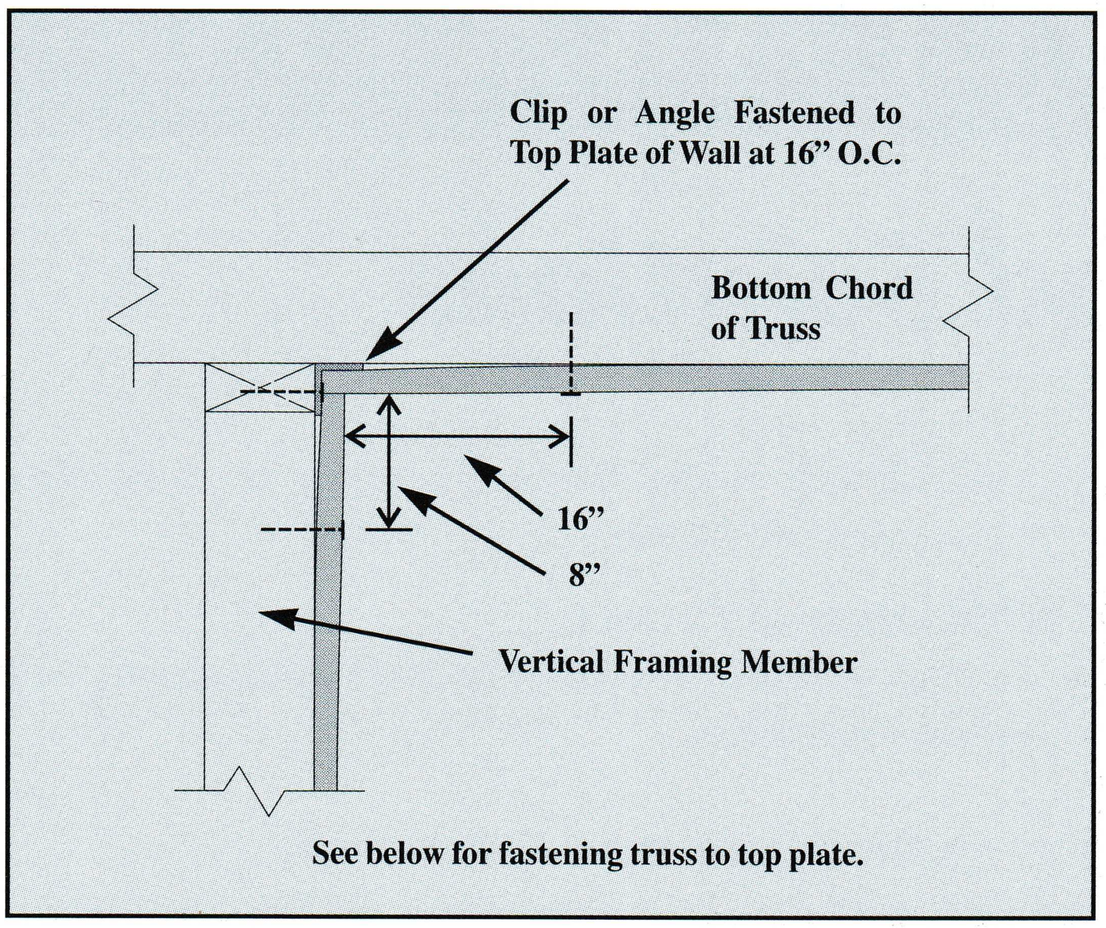

Floating Gypsum Corner I
(Truss Perpendicular to Wall)

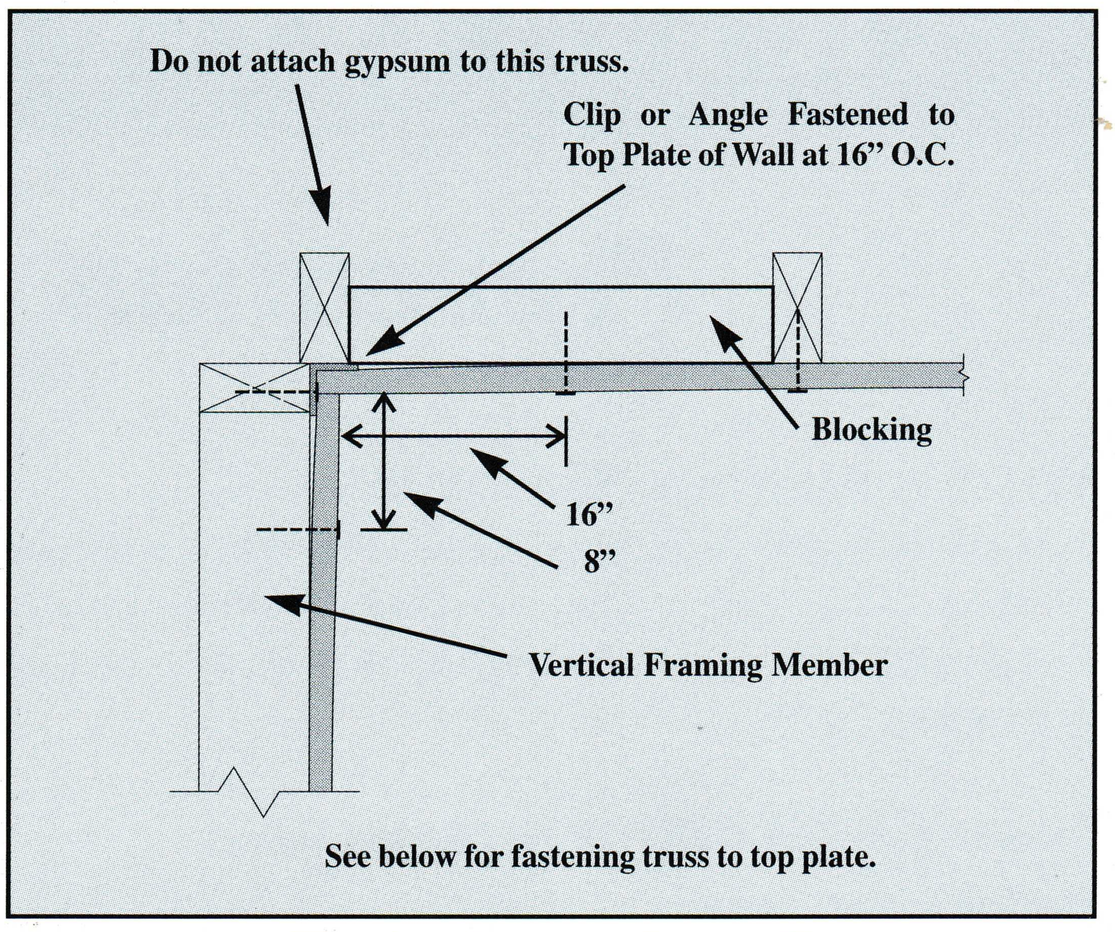

Floating Gypsum Corner II
(Truss Parallel to Wall)

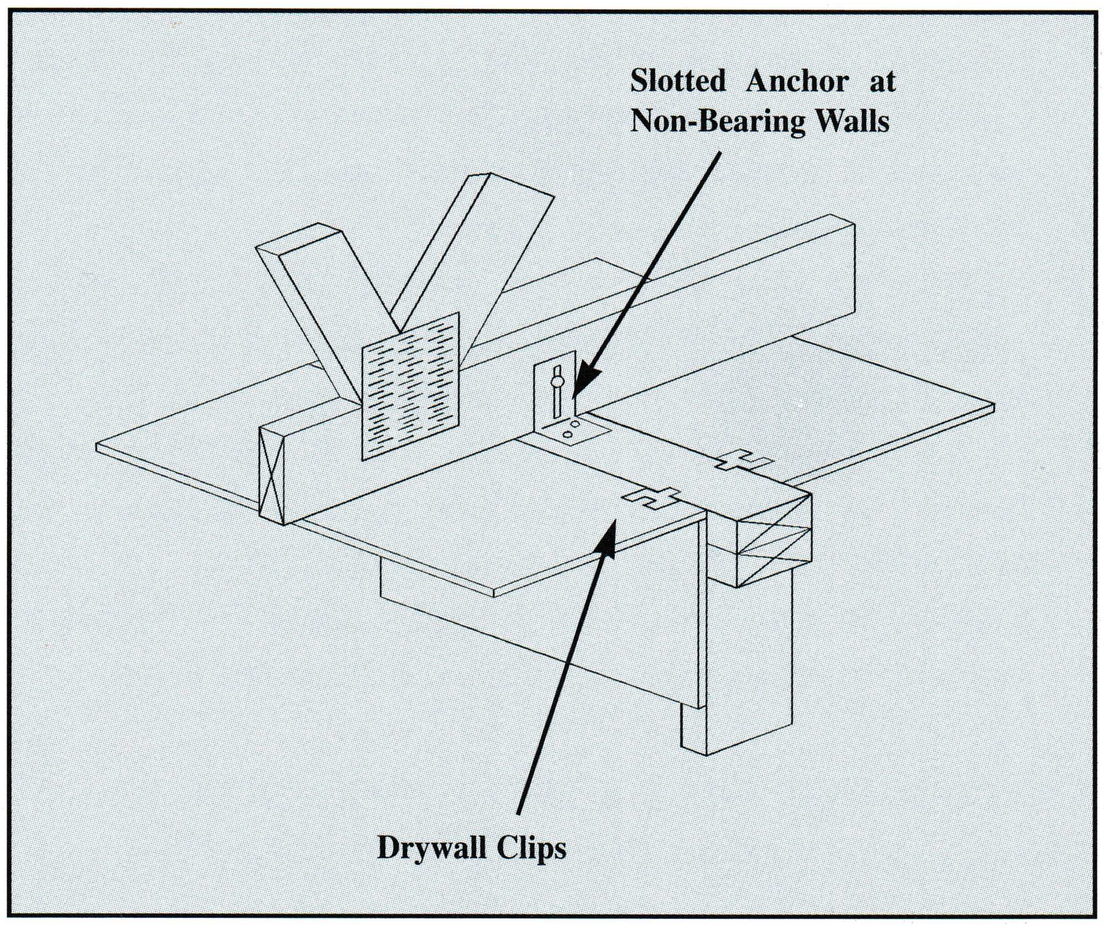

Use of Drywall Clips and Slotted Anchor on Non-Bearing Wall

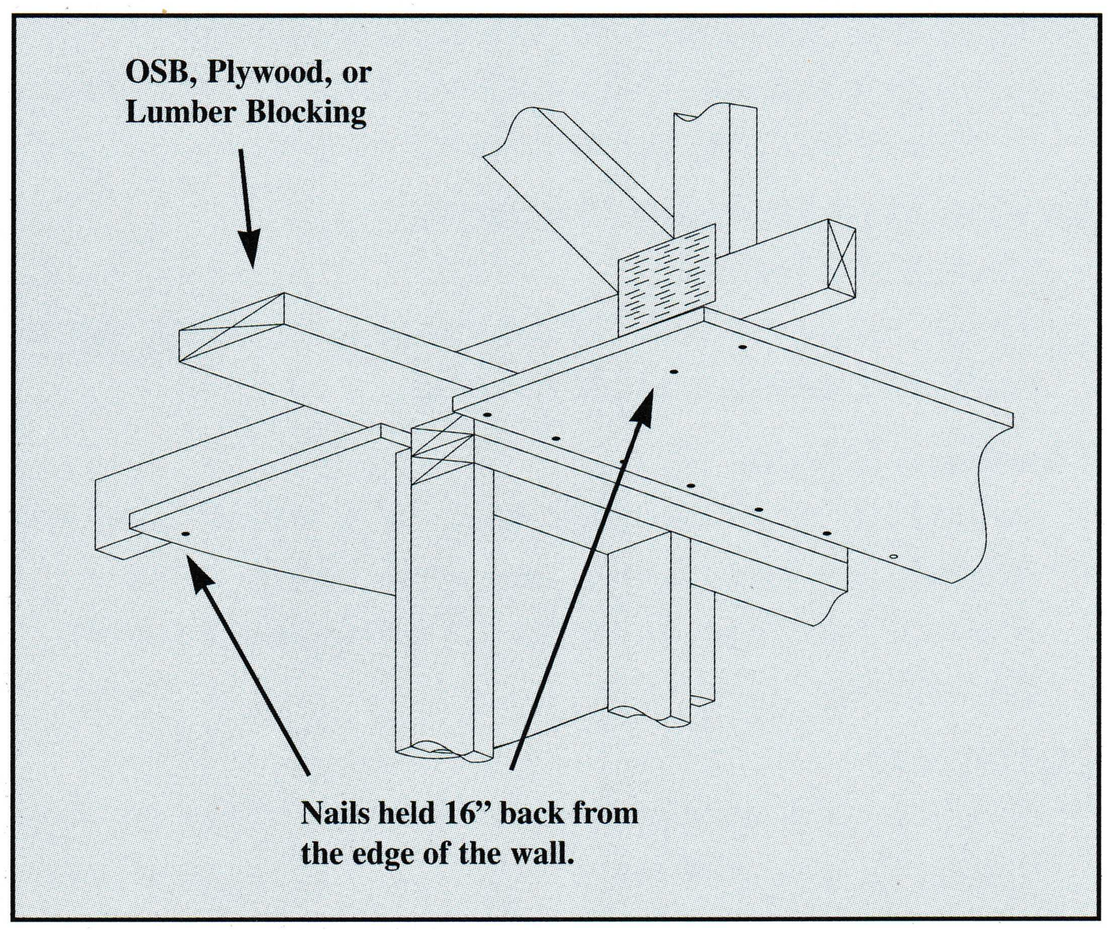

Back Blocking a Gypsum Corner

WARNING: Any party who cuts or damages a truss shall be responsible for securing the engineering required for the repair and subsequent costs.

Truss manufacturers are unable to avoid partition separation by production technique, web configuration, lumber grade, species or any other variable within their control. Partition separation has been known to occur in structures where the roof is conventionally framed (stick framed). Due to these findings, the truss manufacturer assumes no responsibility or liability for the damages, in the rare instances where partition separation occurs.

Wood Truss Council of America

Copyright © 1995 Wood Truss Council of America, Inc.